FWD: WG: AW: oxytrue as housing

3 messages

Steve Nixon <steve.nixon@viamed.co.uk> 24 July 2013 13:16
To: Derek I Lamb <derek.lamb@viamed.co.uk>

Drawing attached

---------- **Forwarded Message** ----------

From: "Lindner, Bernd" <b.lindner@bluepoint-medical.com> (By way of info@viamed.co.uk)
To: SNIXON (Steve Nixon) <GoldMine User>
Date: Wed, 24 Jul 2013 13:16:13 +0100
Subject: **WG: AW: oxytrue as housing**

Hello Steve,

I think shape 1 looks best. Can you agree. We want to push the project forward.
With kind regards
Bernd

Von: Radev, N.
Gesendet: Dienstag, 23. Juli 2013 09:35
An: william.pan@justec.cn
Cc: Lindner, Bernd; Froehlich, Heidi
Betreff: AW: AW: oxytrue as housing

Hi William,.

We believe the optimal location and shape for this extra w arning LED is â shape 2â s. attached picture.

It looks good and it w ill be easy for implementation. If there is no place on the main pcb then this led can be mounted on an extra small pcb and fit on the housing (melted pins) from inside.

Best regards

Ned

Dr.-Ing. Nedyalko Radev

/Development Engineer/

bluepoint MEDICAL GmbH & Co. KG

Tel +49-(0)-38823-548-8024
Fax +49-(0)-38823-548-8029
Mail n.radev@bluepoint-medical.com
Web w w w .bluepoint-medical.com

Trade register: Schw erin, Reg.-No.: HRA 2600

Disclaimer: This message may contain confidential and /or privileged information. If you are not the addressee or authorized to receive this for the addressee, you must not use, copy, disclose or take any action based on this message or any information herein. If you have received this message in error, please advice the sender immediately by reply e-mail and delete this message.

Thank you for your cooperation.

Von: williampan [mailto:william.pan@justec.cn]
Gesendet: Dienstag, 23. Juli 2013 05:41
An: Radev, N.; Froehlich, Heidi; Lindner, Bernd
Betreff: Re: AW: oxytrue as housing

Hello Ned,

How about this design?

ãã

Best Regards,

æ½å«æ±

ä½⊃3;æå¾·ç§æ(æ·±å⊃3;)æéå¬å¸
æ·±å⊃3;å¸åå±±åºé©¬å®¶é¾¼å¤§æ°è·¯88å·éé¾¼å·¥ä¸åº64æ 2æ¥¼

William Pan
Justec Shenzhen Co., Ltd
2F,Building 64,Majialong Industry Zone, Shenzhen,China,518054
TEL:+86-755ï¼26068931
Fax:+86-755-26068933
Mobile:+86-13631608890

www.justec.cn

2013-07-23

======== 2013-07-22 16:20:39 æ¨å¨æ¥ä¿¡ä¸åéï¼ ========

Hi William,

Water proof is not a problem.

You should set design to have transparent part (slightly milky colour) as cover for this additional w arning LED. This part has to be from ABS material and w ill be glued to the Housing w ith solvent glue or UV glue.

Using the keypad back light w ill be not sufficient enough on daylight.

Best regards

Ned

Dr.-Ing. Nedyalko Radev

/Development Engineer/

bluepoint MEDICAL GmbH & Co. KG

Tel +49-(0)-38823-548-8024
Fax +49-(0)-38823-548-8029
Mail n.radev@bluepoint-medical.com
Web w w w .bluepoint-medical.com

Trade register: Schw erin, Reg.-No.: HRA 2600

Disclaimer: This message may contain confidential and /or privileged information. If you are not the addressee or authorized to receive this for the addressee, you must not use, copy, disclose or take any action based on this message or any information

herein. If you have received this message in error, please advice the sender immediately by reply e-mail and delete this message. Thank you for your cooperation.

Von: williampan [mailto:william.pan@justec.cn]
Gesendet: Montag, 22. Juli 2013 10:12
An: Radev, N.; Froehlich, Heidi; Lindner, Bernd
Betreff: oxytrue as housing

Hello Ned,

You have suggested to have warning light on the front part of the housing.We have checked the housing,it is difficult to have warning light on the front part of the housing because of waterproof.We have to use a transparent part for warning light,but it is difficult to make this part waterproof.There is no enough space on the front part of the housing of this light.So we suggest to use the keypad light as warning light.

ãã

Best Regards,

æ½å«æ±

ä½⊃3;æå¾·ç§æ(æ·±å⊃3;)æéå¬å¸
æ·±å⊃3;å¸åå±±åºé©¬å®¶é¾å¤§æ°è·¯88å·éé¾å·¥ä¸åº64æ 2æ¥¼

William Pan
Justec Shenzhen Co., Ltd
2F,Building 64,Majialong Industry Zone, Shenzhen,China,518054
TEL:+86-755ï¼26068931
Fax:+86-755-26068933
Mobile:+86-13631608890

www.justec.cn

2013-07-22

ãããããããããã ã

ãããããããããããããã

= ããããããããããããããã

ãããããããããããããã

ãããããããããããããããã

SKMBT_C35313072309160.pdf
325K

Steve Nixon <steve.nixon@viamed.co.uk> 24 July 2013 13:17
To: Derek I Lamb <derek.lamb@viamed.co.uk>

Updated drawings attached

---------- **Forwarded Message** ----------

From: "Lindner, Bernd" <b.lindner@bluepoint-medical.com> (By way of info@viamed.co.uk)
To: SNIXON (Steve Nixon) <GoldMine User>
Date: Wed, 24 Jul 2013 13:17:23 +0100
Subject: **WG: AW: AW: oxytrue as housing**

Here the shape 1 version.

Kind regards
Bernd

Von: williampan [william.pan@justec.cn]
Gesendet: Mittwoch, 24. Juli 2013 10:50
An: Lindner, Bernd; Radev, N.
Cc: Froehlich, Heidi
Betreff: Re: AW: AW: oxytrue as housing

Hello Bernd,

There is no space for the shape 2.
Here is the design based on shape 1.
ãã

Best Regards,

æ½å«æ±

ä½⊃3;æå¾·ç§æ(æ·±å⊃3;)æéå¬å¸
æ·±å⊃3;å¸åå±±åºé©¬å®¶é¾å¤§æ°è·¯88å·éé¾å·¥ä¸åº64æ 2æ¥¼
William Pan
Justec Shenzhen Co., Ltd
2F,Building 64,Majialong Industry Zone, Shenzhen,China,518054
TEL:+86-755ï¼26068931
Fax:+86-755-26068933
Mobile:+86-13631608890
www.justec.cn
2013-07-24

======== 2013-07-24 14:44:00 æ¨å¨æ¥ä¿¡ä¸¸åéï¼ ========

Hello William,

shape 1 looks best.

With kind regards

Bernd

[Quoted text hidden]

[Quoted text hidden]

This message has been scanned for malware.

4 attachments

ap_mobile.jpg
39K

ap_mobile-2.jpg
44K

ap_mobile-3.jpg
42K

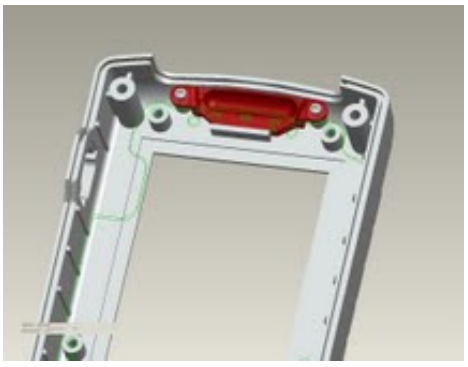

ap_mobile-4.jpg
68K

Steve Nixon <steve.nixon@viamed.co.uk> 24 July 2013 13:18
To: Derek I Lamb <derek.lamb@viamed.co.uk>

---------- **Forwarded Message** ----------

From: "Lindner, Bernd" <b.lindner@bluepoint-medical.com> (By way of info@viamed.co.uk)
To: SNIXON (Steve Nixon) <GoldMine User>
Date: Wed, 24 Jul 2013 13:18:08 +0100
Subject: **AW: AW: oxytrue as housing**

We only want to add one additonal alarm light, which is shape 1.

With kind regards
Bernd

Von: steve.nixon.viamed@googlemail.com [steve.nixon.viamed@googlemail.com] im Auftrag von Steve Nixon [steve.nixon@viamed.co.uk]
Gesendet: Mittwoch, 24. Juli 2013 10:52
An: Lindner, Bernd
Betreff: Re: AW: oxytrue as housing

Bernd

Why do we need the extra alarm indicator/s? Is it legislation, because the TFT is not as clear as OLED, or just to provide extra all around indication?

Are you planning to fit 3 warning lights (one on top and one either side) as per the drawings or just one on top?

If 3 lights â then I suggest shape 2 for the top.

If 1 light â then perhaps shape one is the better option.

Steve

On 24 July 2013 07:43, Lindner, Bernd <

b.lindner@bluepoint-medical.com> wrote:

Hello Steve,

I think shape 1 looks best. Can you agree. We want to push the project forward.

With kind regards

Bernd

[Quoted text hidden]

[Quoted text hidden]

[Quoted text hidden]

www.justec.cn

[Quoted text hidden]

[Quoted text hidden]

--

Steve

Steve Nixon
Director - Viamed Ltd.

This message has been scanned for malware.