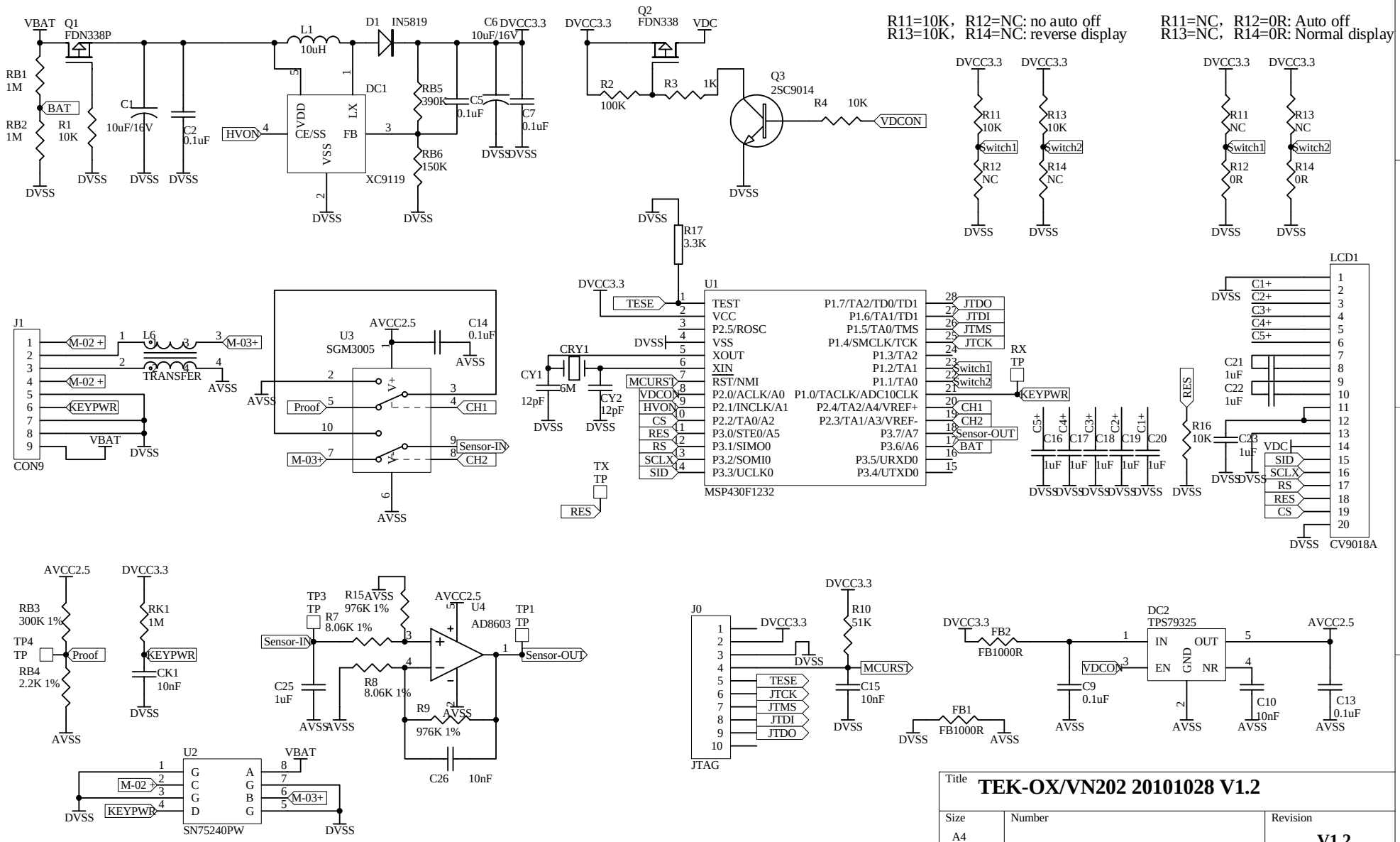
R11=10K, R12=NC: no auto off
R13=10K, R14=NC: reverse display
R11=NC, R12=0R: Auto off
R13=NC, R14=0R: Normal display
VBAT
Q1
FDN338P
RB1
1M
RB2
1M
BAT
R1
10K
C1
10uF/16V
C2
0.1uF
DVSS
L1
10uH
D1
IN5819
C6
10uF/16V
DVCC3.3
DC1
VDD
CE/SS
VSS
LX
FB
HVON
XC9119
RB5
390K
RB6
150K
C5
0.1uF
C7
0.1uF
Q2
FDN338
VDC
R2
100K
R3
1K
Q3
2SC9014
R4
10K
VDCON
R11
10K
R12
NC
R13
10K
R14
NC
R11
NC
R12
0R
R13
NC
R14
0R
Switch1
Switch2
R17
3.3K
U1
TESE
TEST
VCC
P2.5/ROSC
VSS
XOUT
XIN
RST/NMI
P2.0/ACLK/A0
P2.1/INCLK/A1
P2.2/TA0/A2
P3.0/STE0/A5
P3.1/SIMO0
P3.2/SOMI0
P3.3/UCLK0
P1.7/TA2/TD0/TD1
P1.6/TA1/TD1
P1.5/TA0/TMS
P1.4/SMCLK/TCK
P1.3/TA2
P1.2/TA1
P1.1/TA0
P1.0/TACLK/ADC10CLK
P2.4/TA2/A4/VREF+
P2.3/TA1/A3/VREF-
P3.7/A7
P3.6/A6
P3.5/URXD0
P3.4/UTXD0
JTDO
JTDI
JTMS
JTCK
Switch1
Switch2
CH1
CH2
Sensor-OUT
BAT
MCURST
VDCON
HVON
CS
RES
RS
SCLX
SID
MSP430F1232
CRY1
6M
CY1
12pF
CY2
12pF
TX
TP
RX
TP
KEYPWR
C5+
C16
C17
C18
C19
C20
C4+
C3+
C2+
C1+
1uF
RES
R16
10K
C23
1uF
LCD1
C1+
C2+
C3+
C4+
C5+
C21
1uF
C22
1uF
VDC
SID
SCLX
RS
RES
CS
CV9018A
J1
CON9
M-02 +
M-02 +
KEYPWR
M-03+
L6
TRANSFER
U3
SGM3005
AVCC2.5
C14
0.1uF
AVSS
Proof
CH1
Sensor-IN
CH2
M-03+
RB3
300K 1%
TP4
TP
Proof
RB4
2.2K 1%
RK1
1M
KEYPWR
CK1
10nF
TP3
TP
R15
976K 1%
R7
8.06K 1%
Sensor-IN
C25
1uF
R8
8.06K 1%
R9
976K 1%
C26
10nF
U4
AD8603
TP1
TP
Sensor-OUT
U2
SN75240PW
G
C
G
D
A
G
B
G
M-02 +
KEYPWR
M-03+
J0
JTAG
TESE
JTCK
JTMS
JTDI
JTDO
R10
51K
C15
10nF
MCURST
FB2
FB1000R
FB1
FB1000R
DC2
TPS79325
IN
OUT
EN
GND
NR
VDCON
C9
0.1uF
C10
10nF
C13
0.1uF
Title
TEK-OX/VN202 20101028 V1.2
Size
A4
Number
Revision
V1.2
Date: 4-Jul-2011
Sheet of
File: I:\VIAMED Project\VN202 Lite\Protel\VN202-20101303.ddb
WU