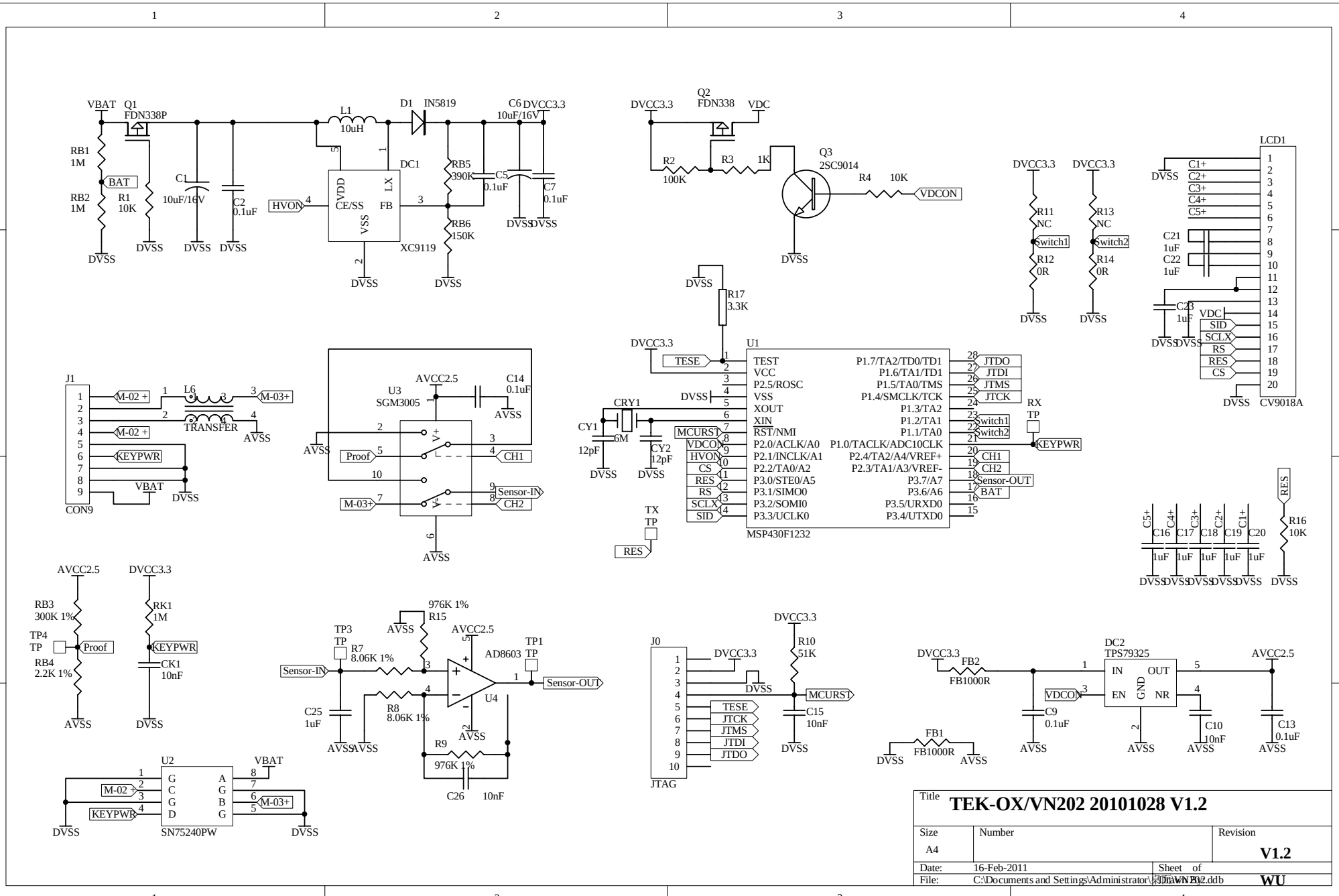

Title	**TEK-OX/VN202 20101028 V1.2**	
Size A4	Number	Revision **V1.2**
Date: 16-Feb-2011	Sheet of	
File: C:\Documents and Settings\Administrator\桌面\TEK-VN202.ddb	Drawn By: **WU**	