REVISIONS				
REV	DESCRIPTION	DATE	APP.	REV. BY
7	INC. ECO 96-0713	6-11-97	MG	JCR
8	INC. ECO 99-0164			DC

NOTES: UNLESS OTHERWISE SPECIFIED.

1. LABEL PER CUSTOMER SPECIFICATION
2. CONNECTIONS POLARITY :

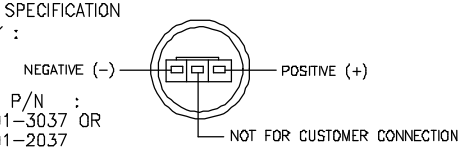

MATING PLUG- MOLEX P/N :
22-01-3037 OR
22-01-2037

3. TEMPERATURE COMPENSATION ERROR IS ±5% OF FULL SCALE OVER THE OPERATING TEMPERATURE RANGE. (AFTER CALIBRATION AT 25°C) THE WORST CASE TRACKING ERROR (WITHIN THE FIRST HOUR AFTER A MAXIMUM TEMPERATURE STEP) IS ±10% OF FULL SCALE. (GAS SAMPLES MUST BE BROUGHT TO AMBIENT TEMPERATURE) PERCENT READOUT IS ONLY WITHIN ±1% AT CONSTANT PRESSURE (E.G. A 10% INCREASE IN PRESSURE WILL RESULT IN A 10% INCREASE IN READING).
4. ASSEMBLY TO BE PACKAGED IN A GAS BARRIER BAG.
5. ASSEMBLY MANUFACTURED AND TESTED TO MPD61679.

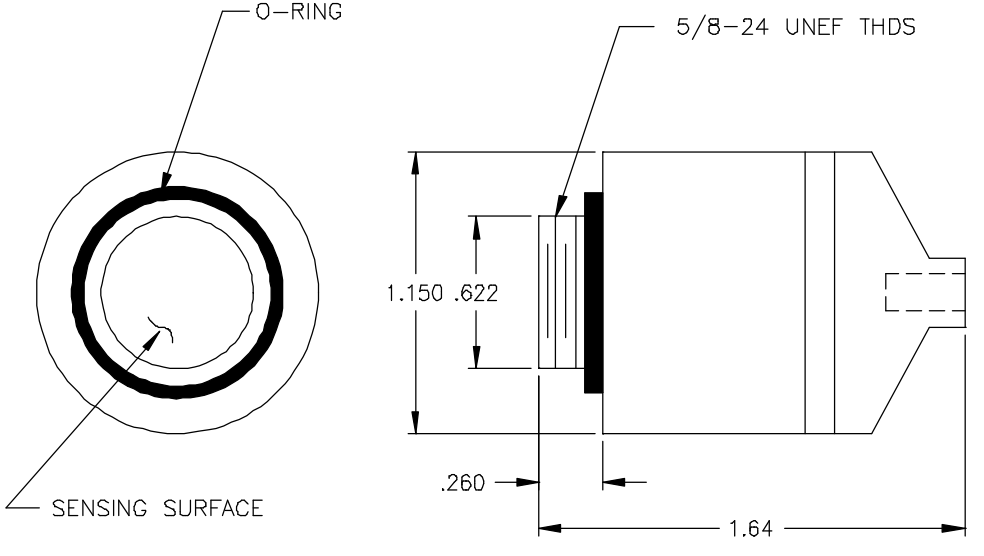

SPECIFICATIONS:

1. OUTPUT - (7-13MV) IN AIR 25°C AT SEA LEVEL.
2. RANGE - 0-100% OXYGEN (MAX), 0-1% OXYGEN (MIN).
3. RESPONSE TIME - LESS THAN 6 SEC. FOR 90% OF FINAL VALUE.
4. OPERATING TEMPERATURE RANGE - 0° TO 40°C (32° TO 104°F)
5. AVG EXPECTED CELL LIFE - 36 MONTHS IN AIR AT 25°C, 50% R.H.
6. STORAGE TEMPERATURE - 0° TO 50°C (32° TO 122°F)
7. HUMIDITY - 0 TO 99% RH (NON-CONDENSING).
8. ACCURACY - WITHIN ±1% OF FULL SCALE AT CONSTANT TEMPERATURE AND PRESSURE (SEE NOTE 3)
9. WEIGHT - 1.2 OZ (32 GM)
10. OFFSET - ≤ 0.1% O2 IN ≤ 30 SECONDS FOR A STEP CHANGE FROM AIR TO 0% O2.
11. REQUIRED LOAD 10K

DO NOT SCALE DWG

TOLERANCE UNLESS OTHERWISE SPECIFIED: ANGULAR ±1/2°
LINEAR .X = ±.1, .XX = ±.02, .XXX = ±.010

THIS DRAWING IS THE PROPERTY OF TELEDYNE ANALYTICAL INSTRUMENTS AND CONTAINS CONFIDENTIAL INFORMATION. IT IS NOT TO BE COPIED, REPRODUCED OR USED WITHOUT WRITTEN PERMISSION.

Teledyne Analytical Instruments
A business unit of Teledyne Electronic Technologies
CITY OF INDUSTRY, CALIFORNIA 91748

	SIGNATURES	DATE
N/	DRFT: L. GARCES	04/28/93
I/	CHK:	
P/	APPR:	
O/	ENGR: JAY LAUER	
F/	S.O.:	
REFERENCE	CAD I.D. B56358-8	

TITLE
SPEC CONTROL DWG
OXYGEN SENSOR
CLASS R21A

SCALE NONE
SIM NONE
SHEET 1 OF 1

MATL. NOTED
DWG NO. B-56358
REV 8