Subject : Viamed - Case stress marks
Date : Thu, 1 Jun 2006 09:58:00 +0100
Linked to : Robert Ham
From : robertham@automatic.com.hk (By way of helen.lamb@viamed.co.uk)
To : SNIXON (Steve Nixon) <GoldMine User>
Cc : JSLAMB (John Lamb) <GoldMine User>; DEREK (Derek I Lamb) <GoldMine User>

Steve,

Previously the lugs on the top cover causing stress mark on the bottom cover. The tooling has been modified and reflected in the EP that you received. Attached is the latest drawing for Microstim. Please approve by return e-mail with the attachment saying that these drawings are approved. Thanks.

Regards, Robert

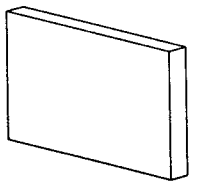

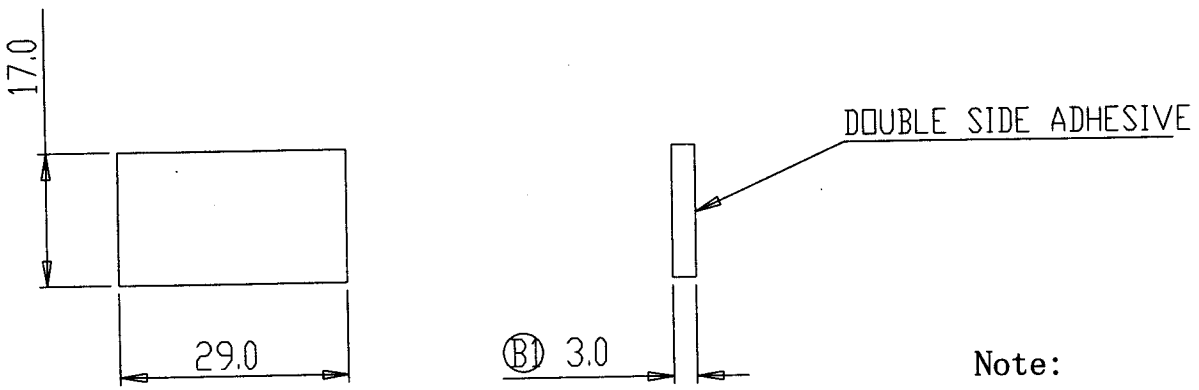

Note:

1, The requirement of RoHS must be met.

2, Fireproof material must be used.

3, Single side with double side adhesive.

REV.	ZONE-CHANGES	ER#	DATE	CR NO.
B	B1 was changed to 3.0		Apr/18/06	
A	NEW RELEASE			

MAT'L	EVA FOAM	UNLESS OTHERWISE STATED		HEALTHCARE TECHNOLOGY INTERNATIONAL LTD.	
COLOR	GRAY	TEXTURE	WALL THICHNESS	MM	TITLE: FOAM
HARDNESS		COATING	LINEAR .X	±0.5 MM	M#/D#:
			LINEAR .XX	±0.3 MM	CAVITY
PROCESS/JOINING		ROUGHNESS	ANGULAR	± °	PROJECT #688
			DRAFT ANGLE/SIDE	°MAX	DSGN
			BURR & FLASH	MAX	DFTS
STANDARDS			BREAK & CORNER	R MAX	CHKR
			PARTING LINE MISMATCH	MAX	APPD

SCALE		
SHEET	1 OF 1	
PART NO.	688-66750	REV. B

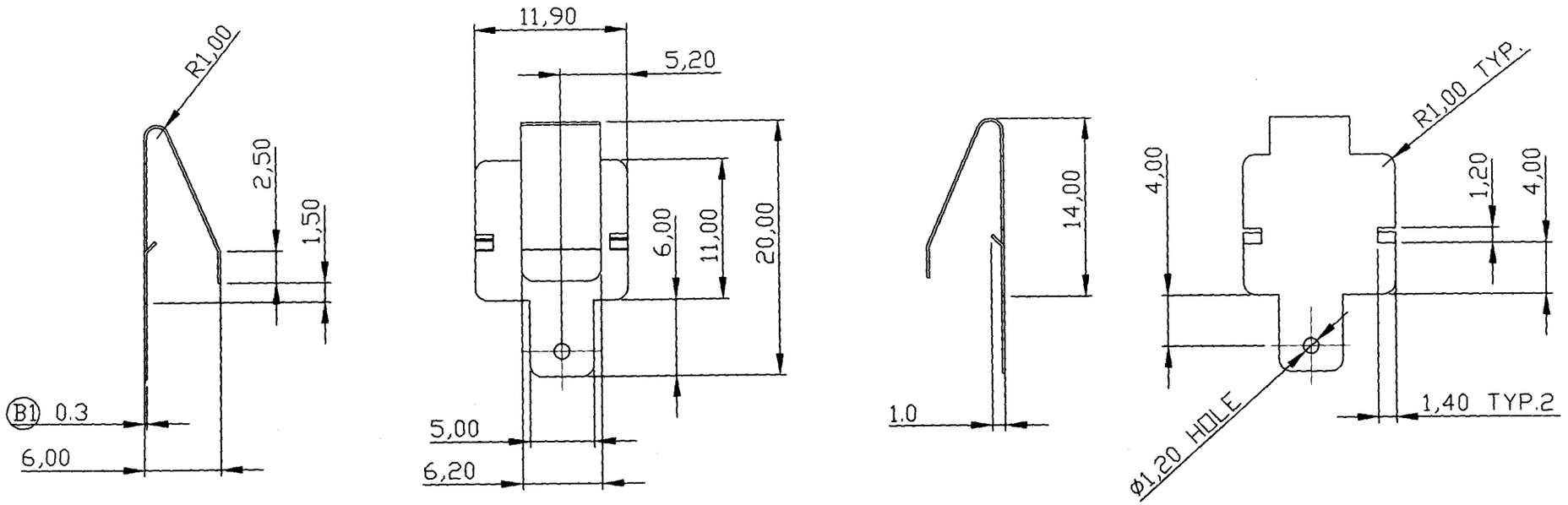

NOTE:

1, The requirement of RoHS must be met.

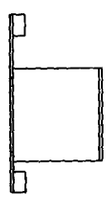

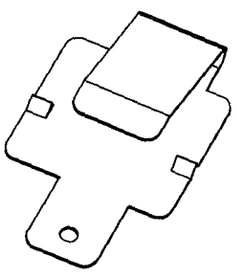

REV.	ZONE-CHANGES	ER#	DATE	CR NO.
B	B1 WAS CHANGED TO 0.3		Apr/18/06	
A	NEW RELEASE			

MAT'L STAINLESS STEEL SUS302	UNLESS OTHERWISE STATED			HEALTHCARE TECHNOLOGY INTERNATIONAL LTD.	
COLOR / TEXTURE	WALL THICKNESS		0.3 MM	TITLE BATTERY CONTACT POS	D#: 7517 CAVITY
	LINEAR	.X	± 0.1 MM		
HARDNESS / COATING Ni-PLATING		.XX	± 0.05 MM		
	ANGULAR		± 0.5 °	PROJECT #688 / SCALE	
PROCESS/JOINING / ROUGHNESS	DRAFT ANGLE/SIDE		°MAX	DSGN / SHEET 1 OF 1	
	BURR & FLASH		0.1 MAX	DFTS	
STANDARDS	BREAK & CORNER		R 0.2 MAX	CHKR / PART NO.	REV.
	PARTING LINE MISMATCH		MAX	APPD 11C-66740	B

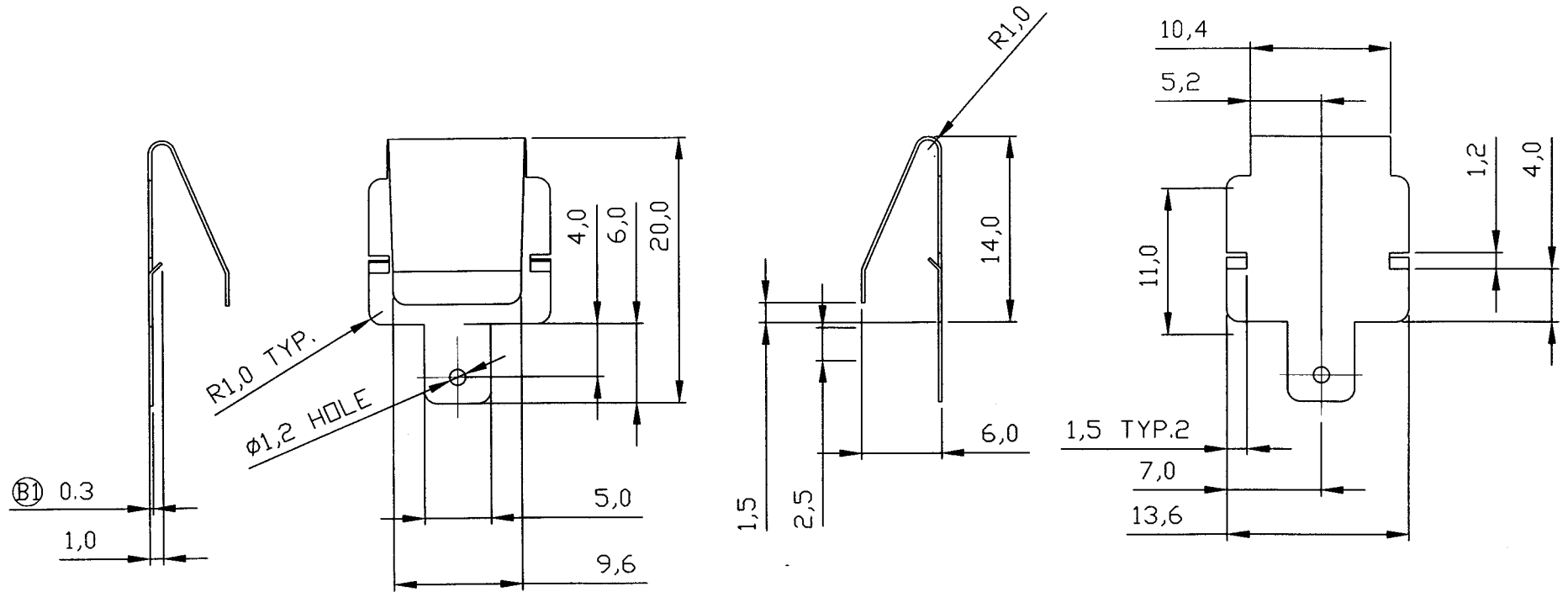

NOTE:

1, The requirement of RoHS must be met.

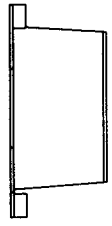

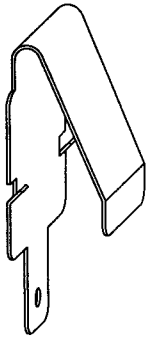

REV.	ZONE-CHANGES	ER#	DATE	CR NO.
B	B1 ADD THE DIM 0.3		Apr/18/06	
A	New Release			

MAT'L	STAINLESS STEEL SUS302	UNLESS OTHERWISE STATED	HEALTHCARE TECHNOLOGY INTERNATIONAL LTD.
COLOR	TEXTURE	WALL THICKNESS	0.3 MM
HARDNESS	COATING	LINEAR .X	± 0.1 MM
	Ni-PLATING	LINEAR .XX	± 0.05 MM
PROCESS/JOINING	ROUGHNESS	ANGULAR	± 0.5 °
		DRAFT ANGLE/SIDE	°MAX
		BURR & FLASH	0.1 MAX
STANDARDS		BREAK & CORNER	R 0.2 MAX
		PARTING LINE MISMATCH	MAX

TITLE	BATTERY CONTACT NEG		D#: 7518 CAVITY
PROJECT	#688	SCALE	
DSGN		SHEET	1 OF 1
DFTS			
CHKR		PART NO.	REV.
APPD	4/18/06	11C-66741	B

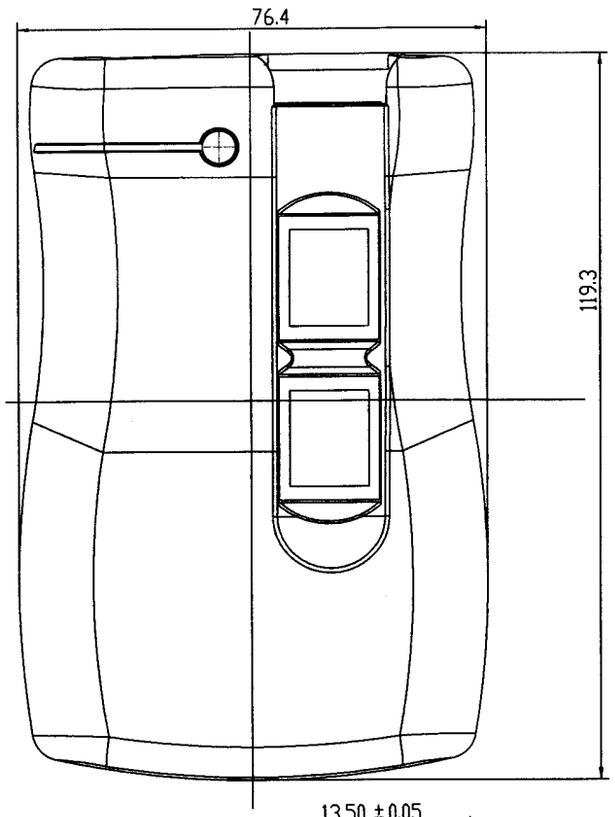

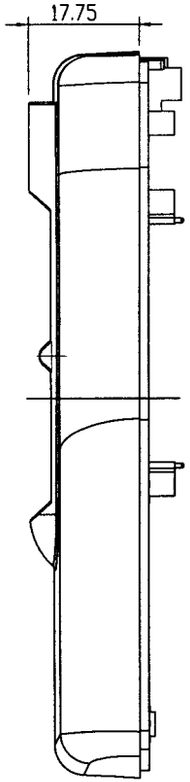

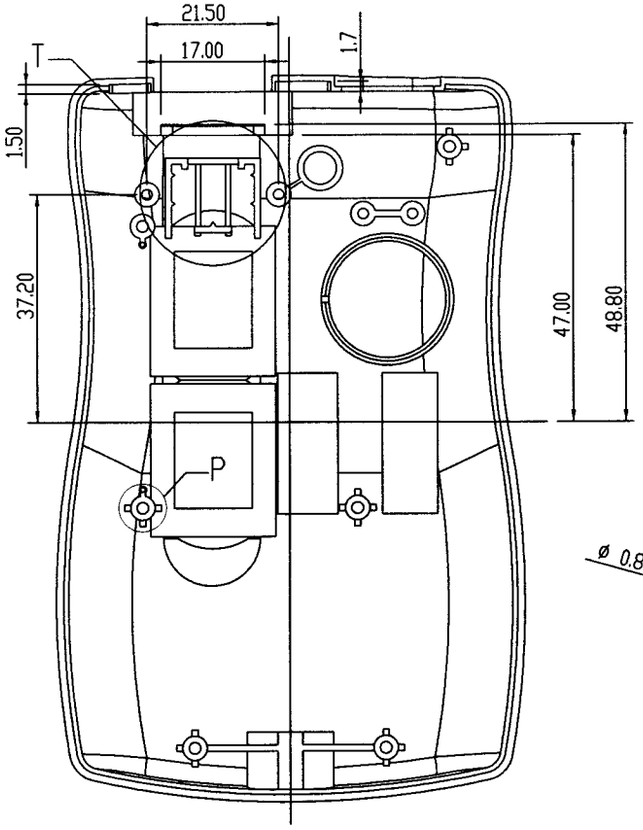

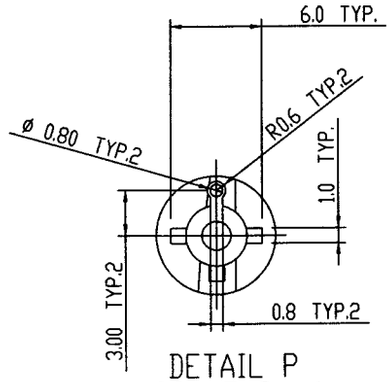

DETAIL P
SCALE 2 : 1

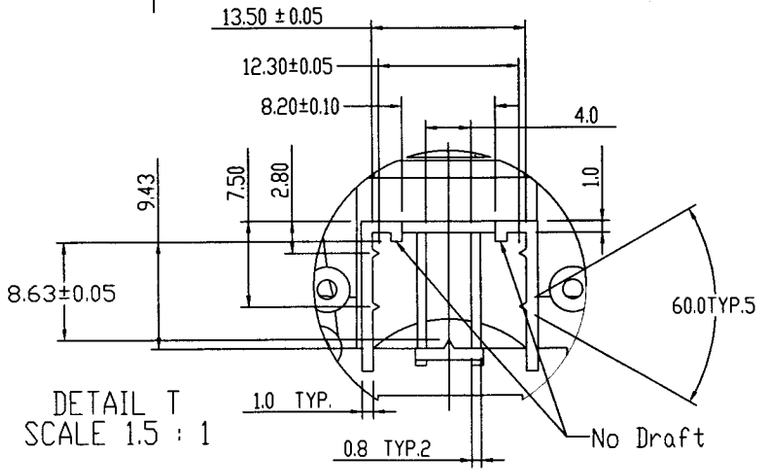

DETAIL T
SCALE 1.5 : 1

REV.	ZONE-CHANGES	ER#	DATE	CR NO.
B	SHEET3,SHEET4 UPDATE		Apr/18/06	
A	NEW RELEASE			

MAT'L	ABS PA766	UNLESS OTHERWISE STATED	HEALTHCARE TECHNOLOGY INTERNATIONAL LTD.
COLOR	Cool Gray 3C	TEXTURE	YS11005
HARDNESS		COATING	
PROCESS/JOINING		ROUGHNESS	
STANDARDS			

WALL THICKNESS		2.0 MM
LINEAR	.X	± 0.1 MM
	.XX	± 0.05 MM
ANGULAR		± 0.5 °
DRAFT ANGLE/SIDE		1°MAX
BURR & FLASH		0.1 MAX
BREAK & CORNER		R 0.2 MAX
PARTING LINE MISMATCH		0.05 MAX

TITLE	TOP HOUSING		M#: 7513
			CAVITY
PROJECT	#688	SCALE	
DSGN		SHEET	1 OF 5
DFTS			
CHKR		PART NO.	REV.
APPD		688-66742	B

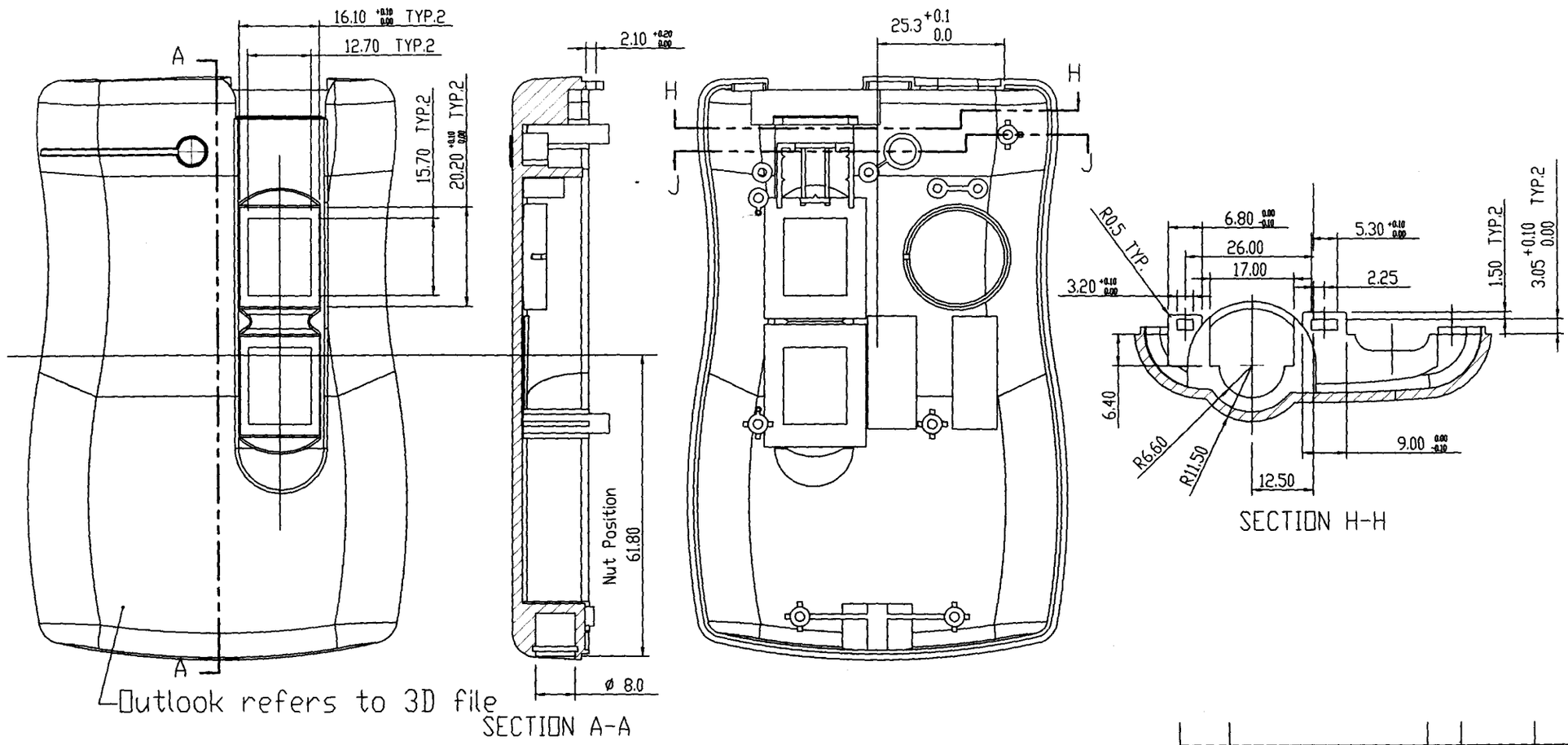

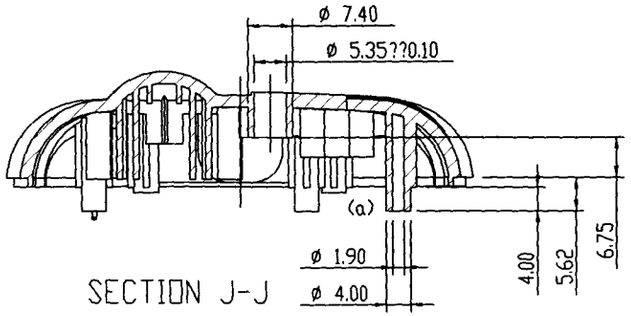

REV.	ZONE-CHANGES	ER#	DATE	CR NO.
B	SHEET3,SHEET4 UPDATE		Apr/18/06	
A	NEW RELEASE			

MAT'L ABS PA766	UNLESS OTHERWISE STATED	HEALTHCARE TECHNOLOGY INTERNATIONAL LTD.	
COLOR Cool Gray 3C / TEXTURE YS11005	WALL THICKNESS 2.0 MM	TITLE TOP HOUSING	M#: 7513 CAVITY
HARDNESS / COATING	LINEAR .X ±0.1 MM; .XX ±0.05 MM		
	ANGULAR ± 0.5 °	PROJECT #688	SCALE
PROCESS/JOINING / ROUGHNESS	DRAFT ANGLE/SIDE 1 °MAX	DSGN	SHEET 2 OF 5
	BURR & FLASH 0.1 MAX	DFTS	
STANDARDS	BREAK & CORNER R 0.2 MAX	CHKR	PART NO. 688-66742 / REV. B
	PARTING LINE MISMATCH 0.05 MAX	APPD	

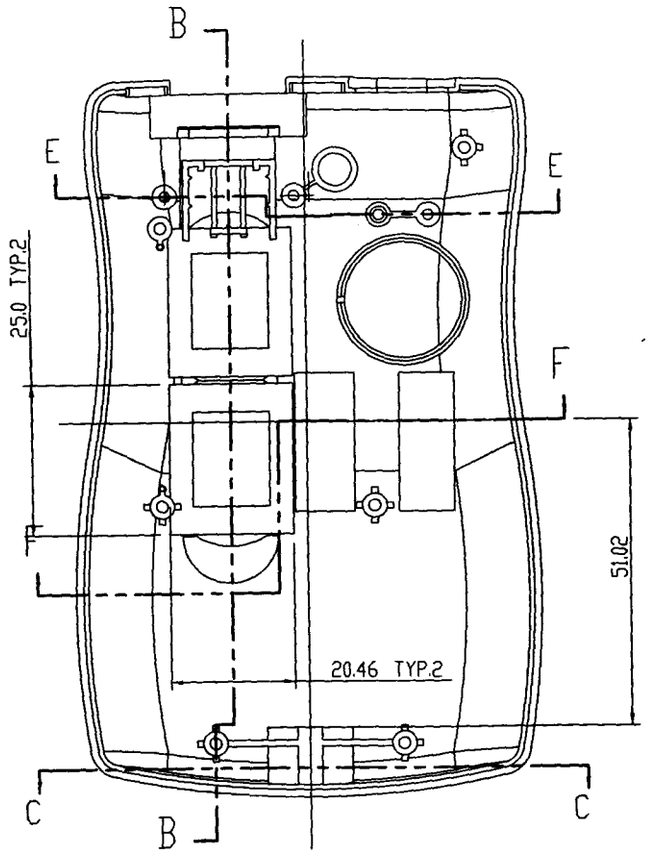

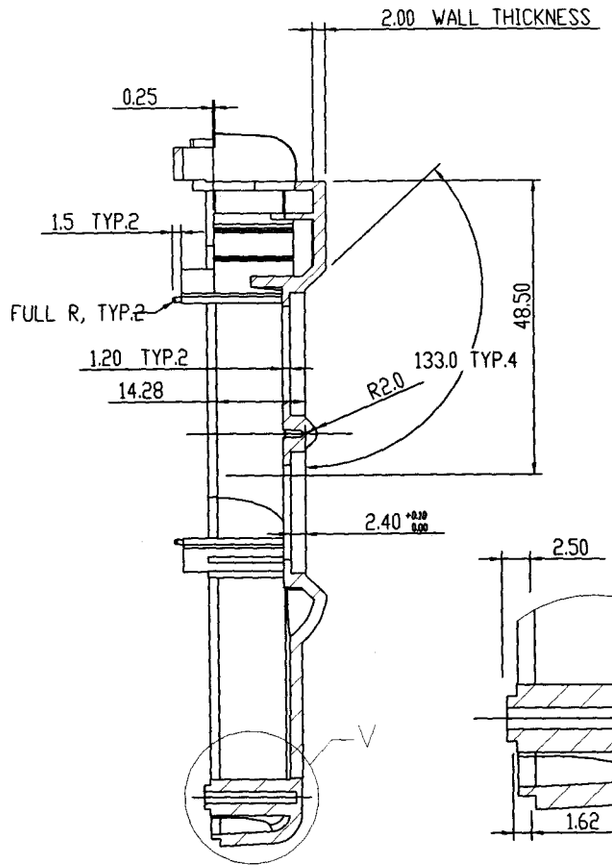

SECTION B-B

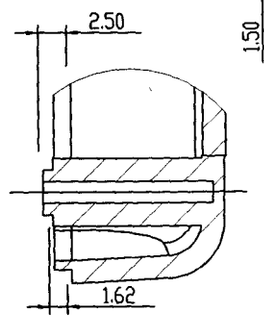

DETAIL V
SCALE 1.5 : 1

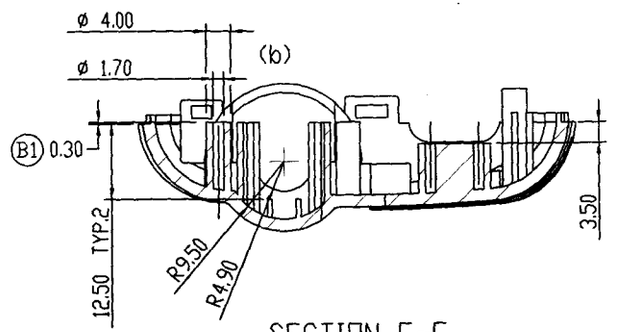

SECTION E-E

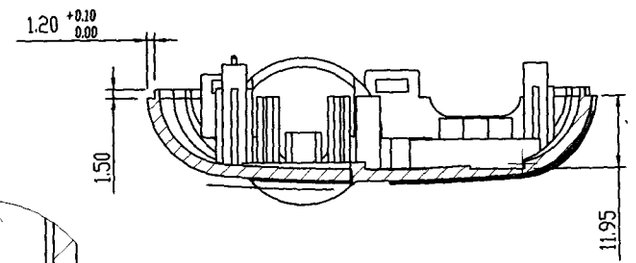

SECTION F-F

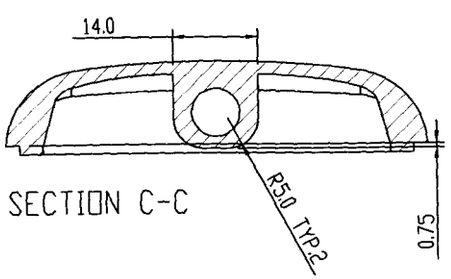

SECTION C-C

REV.	ZONE-CHANGES	ER#	DATE	CR NO.
B	B1 UPDATE		Apr/18/06	
A	NEW RELEASE			

MAT'L	ABS PA766	UNLESS OTHERWISE STATED	HEALTHCARE TECHNOLOGY INTERNATIONAL LTD.
COLOR: Cool Gray 3C	TEXTURE: YS11005	WALL THICKNESS 2.0 MM	TITLE: TOP HOUSING
HARDNESS	COATING	LINEAR .X ± 0.1 MM; .XX ± 0.05 MM	M#: 7513 CAVITY
		ANGULAR ± 0.5°	PROJECT #688
PROCESS/JOINING	ROUGHNESS	DRAFT ANGLE/SIDE 1° MAX	DSGN
		BURR & FLASH 0.1 MAX	DFTS
STANDARDS		BREAK & CORNER R0.2 MAX	CHKR
		PARTING LINE MISMATCH 0.05 MAX	APPD

SCALE | SHEET 3 OF 5 | PART NO. 688-66742 | REV. B

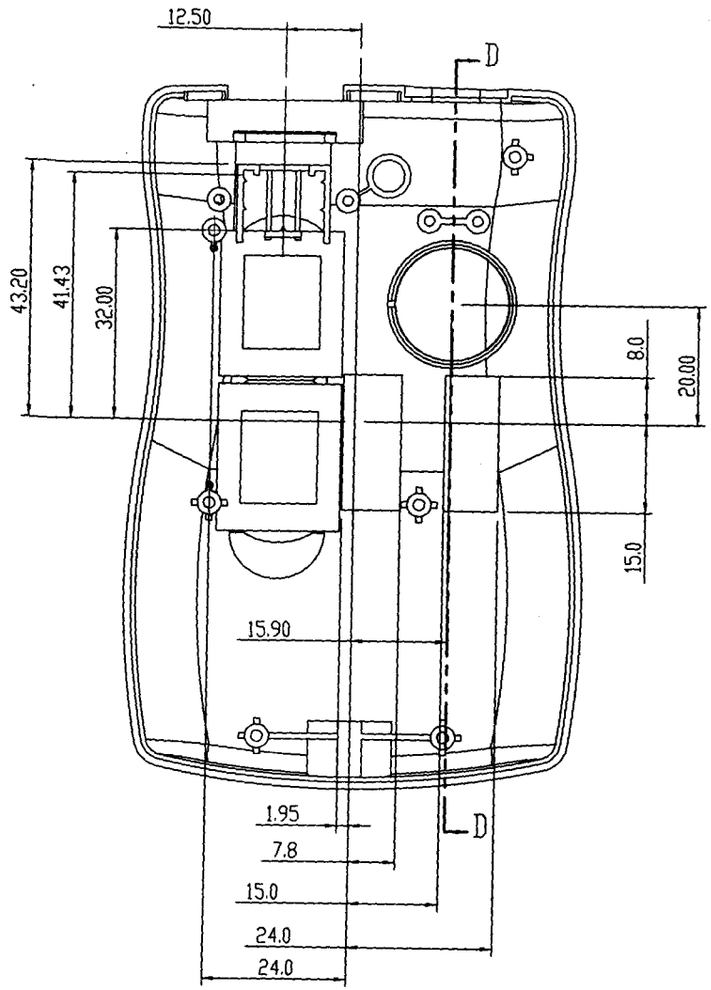

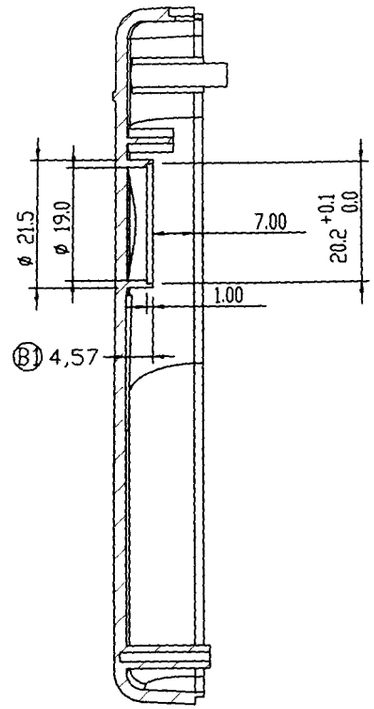

SECTION D-D
SCALE 4 : 5

REV.	ZONE-CHANGES	ER#	DATE	CR NO.
B	B1 UPDATE		Apr/18/06	
A	NEW RELEASE			

MAT'L	ABS PA766	UNLESS OTHERWISE STATED	HEALTHCARE TECHNOLOGY INTERNATIONAL LTD.
COLOR	Cool Gray 3C	TEXTURE	YS11005
HARDNESS		COATING	
PROCESS/JOINING		ROUGHNESS	
STANDARDS			

WALL THICHNESS		2.0 MM
LINEAR	.X	± 0.1 MM
	.XX	± 0.05 MM
ANGULAR		± 0.5 °
DRAFT ANGLE/SIDE		1 °MAX
BURR & FLASH		0.1 MAX
BREAK & CORNER		R 0.2 MAX
PARTING LINE MISMATCH		0.05 MAX

TITLE: TOP HOUSING

M#: 7513
CAVITY

PROJECT	#688	SCALE	
DSGN		SHEET	4 OF 5
DFTS			
CHKR		PART NO.	REV.
APPD		#688-66742	B

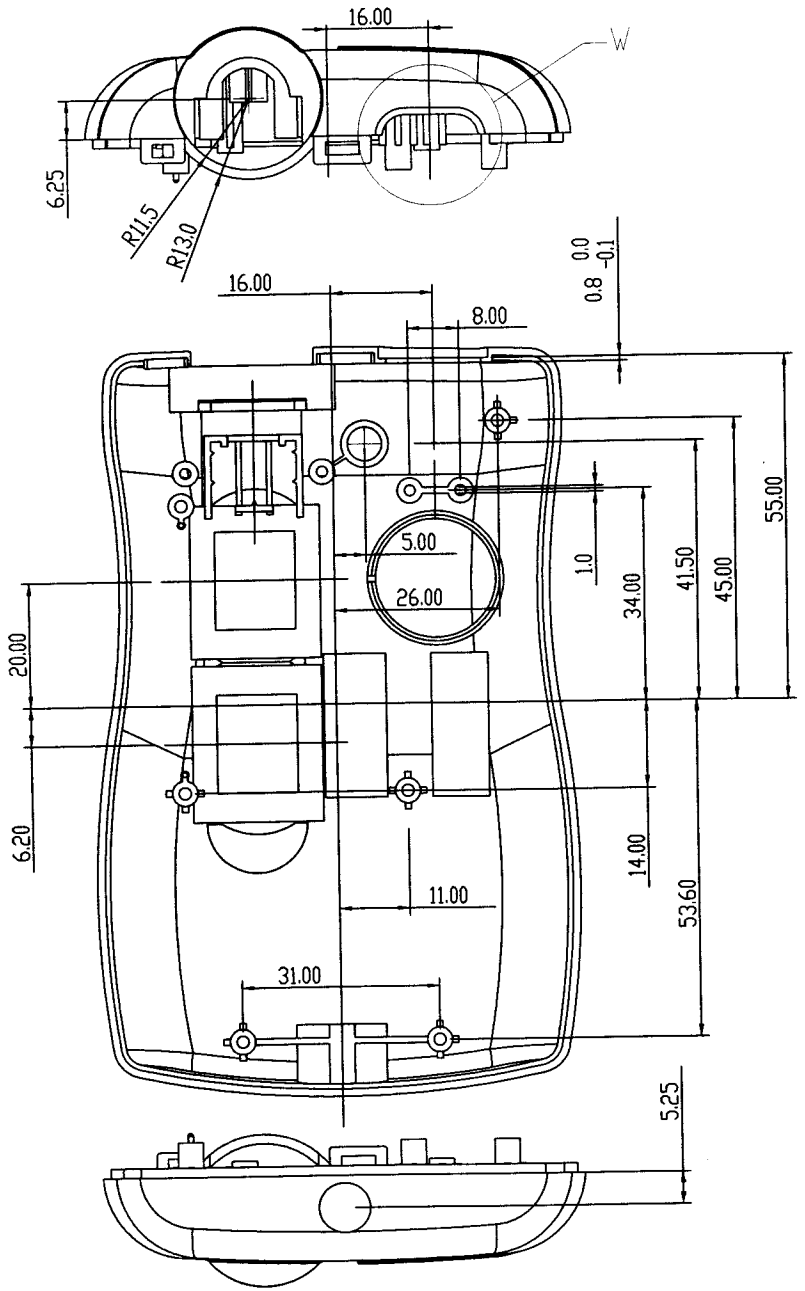

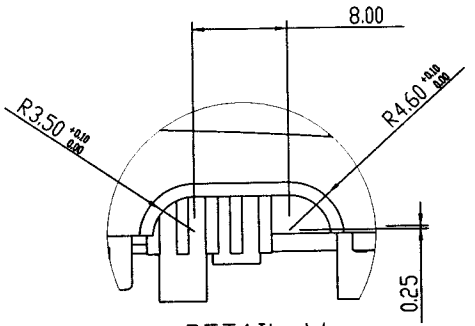

DETAIL W
SCALE 3 : 2

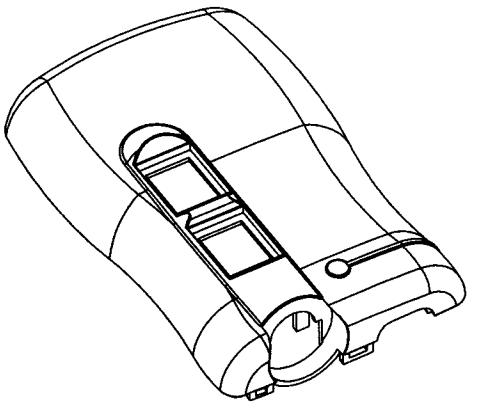

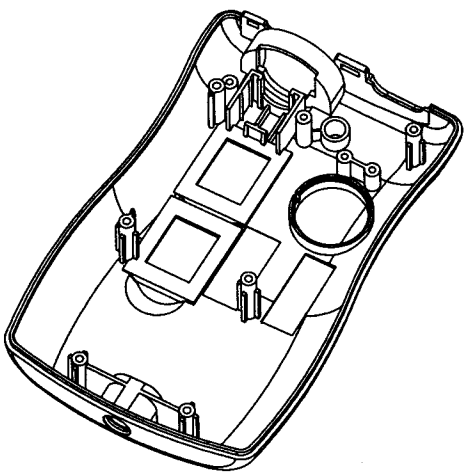

REV.	ZONE-CHANGES	ER#	DATE	CR NO.
B	SHEET3,SHEET4 UPDATE		Apr/18/06	
A	NEW RELEASE			

MAT'L	ABS PA766	UNLESS OTHERWISE STATED	HEALTHCARE TECHNOLOGY INTERNATIONAL LTD.
COLOR	Cool Gray 3C	TEXTURE	YS11005
HARDNESS		COATING	
PROCESS/JOINING		ROUGHNESS	
STANDARDS			

WALL THICKNESS		2.0 MM
LINEAR	.X	± 0.1 MM
	.XX	± 0.05 MM
ANGULAR		± 0.5 °
DRAFT ANGLE/SIDE		1 °MAX
BURR & FLASH		0.1 MAX
BREAK & CORNER		R 0.2 MAX
PARTING LINE MISMATCH		0.05 MAX

TITLE	TOP HOUSING		M#: 7513
			CAVITY
PROJECT	#688	SCALE	
DSGN		SHEET	5OF 5
DFTS			
CHKR		PART NO.	REV.
APPD		688-66742	B

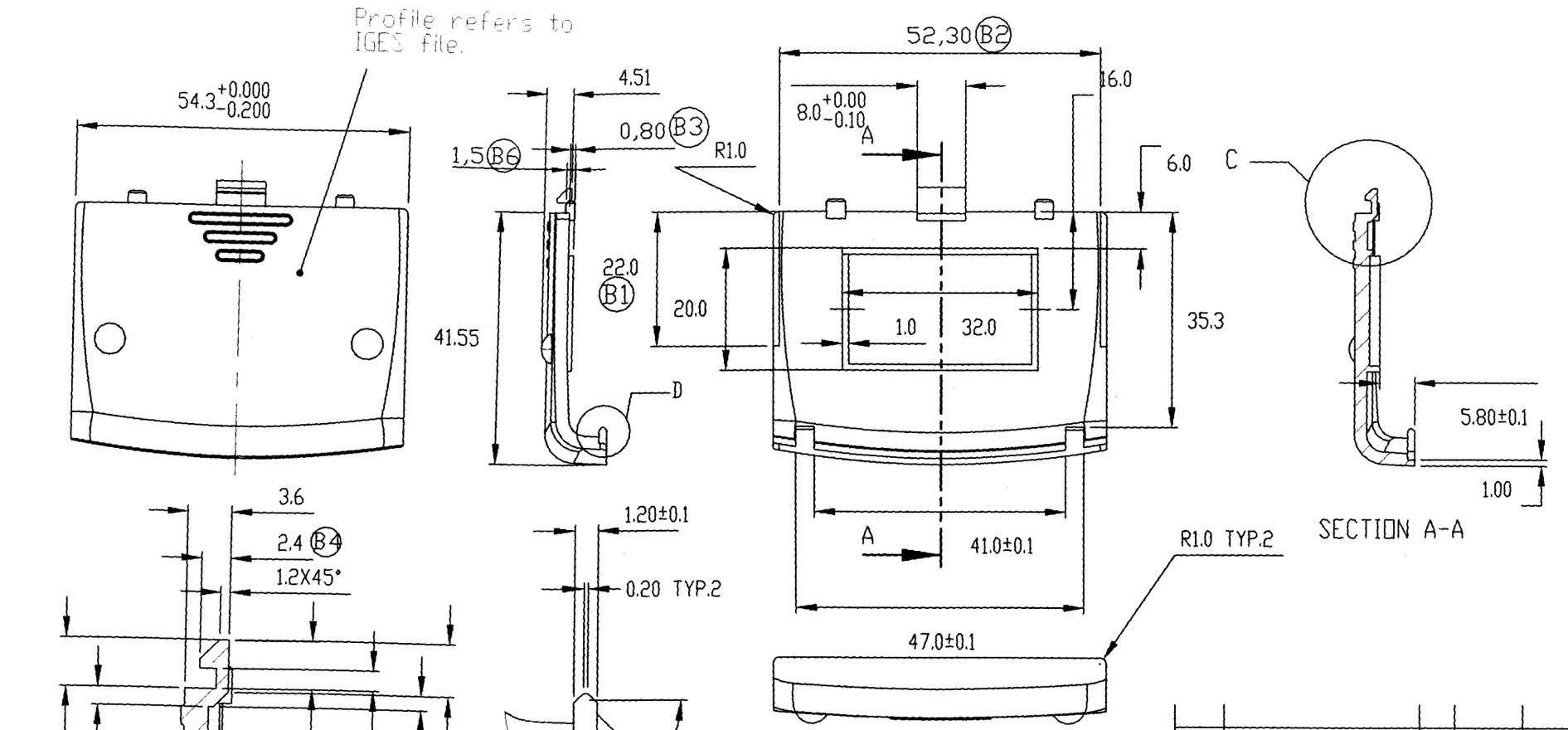

REV.	ZONE-CHANGES	ER#	DATE	CR NO.
B	B1-B6 UPDATE		Apr/18/06	
A	NEW RELEASE			

MAT'L: ABS PA766	UNLESS OTHERWISE STATED	HEALTHCARE TECHNOLOGY INTERNATIONAL LTD.	
COLOR: Cool Gray 3C	TEXTURE: YS11005	WALL THICKNESS: 2.0 MM	TITLE: BATTERY COVER
HARDNESS	COATING	LINEAR .X: ± 0.1 MM; .XX: ±0.05 MM	M#: 7514; CAVITY
		ANGULAR: ± 0.5°	PROJECT: #688
PROCESS/JOINING	ROUGHNESS	DRAFT ANGLE/SIDE: 1° MAX	DSGN
		BURR & FLASH: 0.1 MAX	DFTS
STANDARDS		BREAK & CORNER: R 0.2 MAX	CHKR
		PARTING LINE MISMATCH: 0.05 MAX	APPD

SCALE | SHEET 1 OF 1 | PART NO. 688-66744 | REV. B

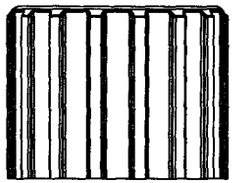

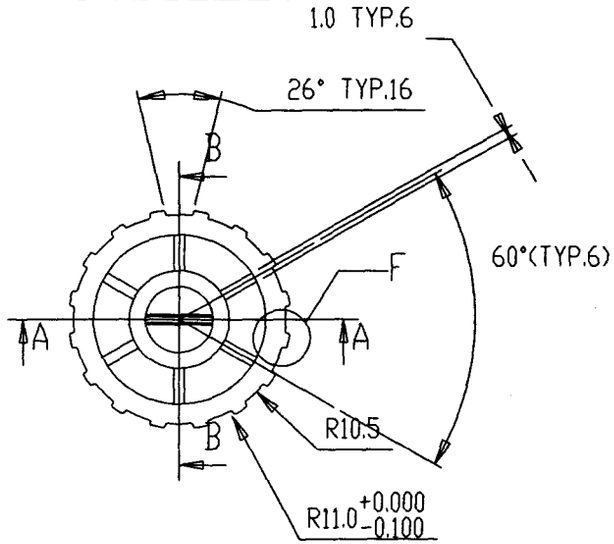

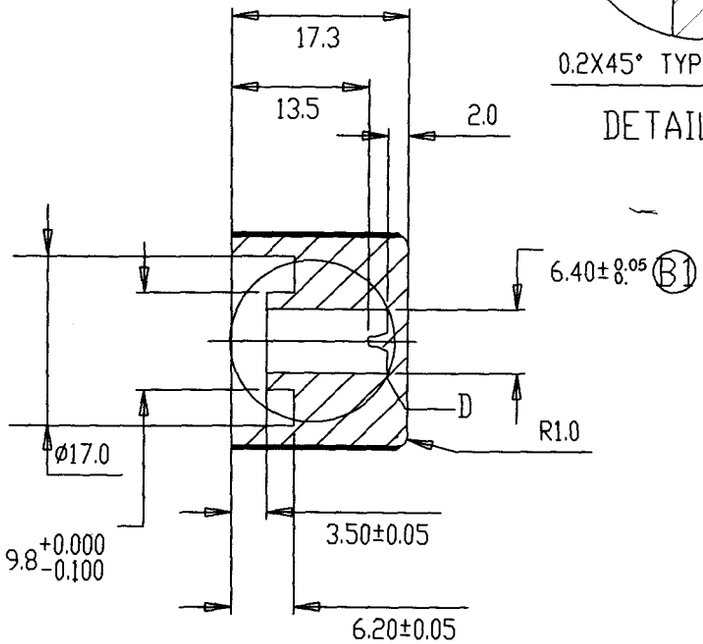

SECTION B-B
SCALE 1.3:1

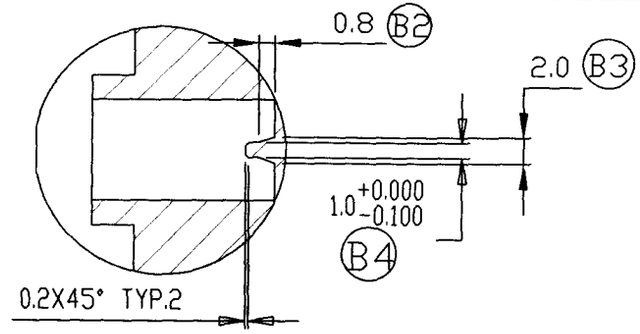

DETAIL D

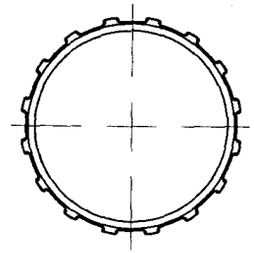

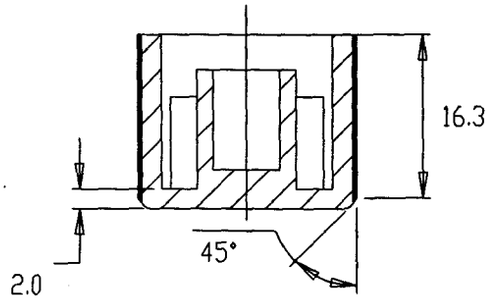

SECTION A-A
SCALE 1.3:1

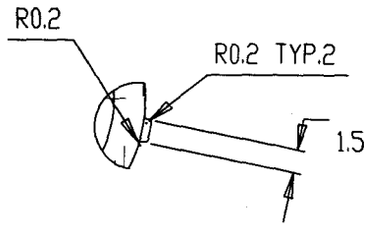

DETAIL F

REV.	ZONE-CHANGES	ER#	DATE	CR NO.
B	B1-B4 UPDATE		Apr/18/06	
A	NEW RELEASE			

MAT'L: ABS PA766	UNLESS OTHERWISE STATED		HEALTHCARE TECHNOLOGY INTERNATIONAL LTD.
COLOR: BLACK	TEXTURE: YS11005	WALL THICKNESS: 2.0 MM	TITLE: KNOB
HARDNESS	COATING	LINEAR .X: ±0.1 MM; LINEAR .XX: ±0.05 MM	M#: 7516; CAVITY
		ANGULAR: ± 0.5°	PROJECT: #688
PROCESS/JOINING	ROUGHNESS	DRAFT ANGLE/SIDE: 1° MAX	DSGN: 4/20
		BURR & FLASH: 0.1 MAX	DFTS: SCALE
STANDARDS		BREAK & CORNER: R 0.2 MAX	CHKR: SHEET 1 OF 1
		PARTING LINE MISMATCH: 0.05 MAX	APPD: 06/4/18 PART NO. 688-66745 REV. B

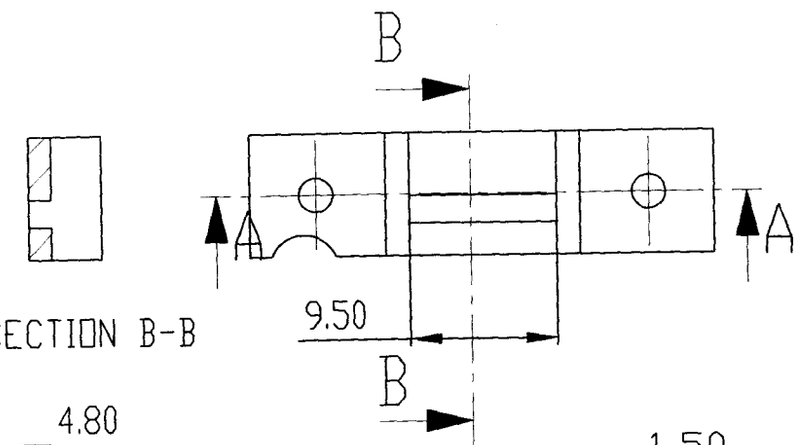

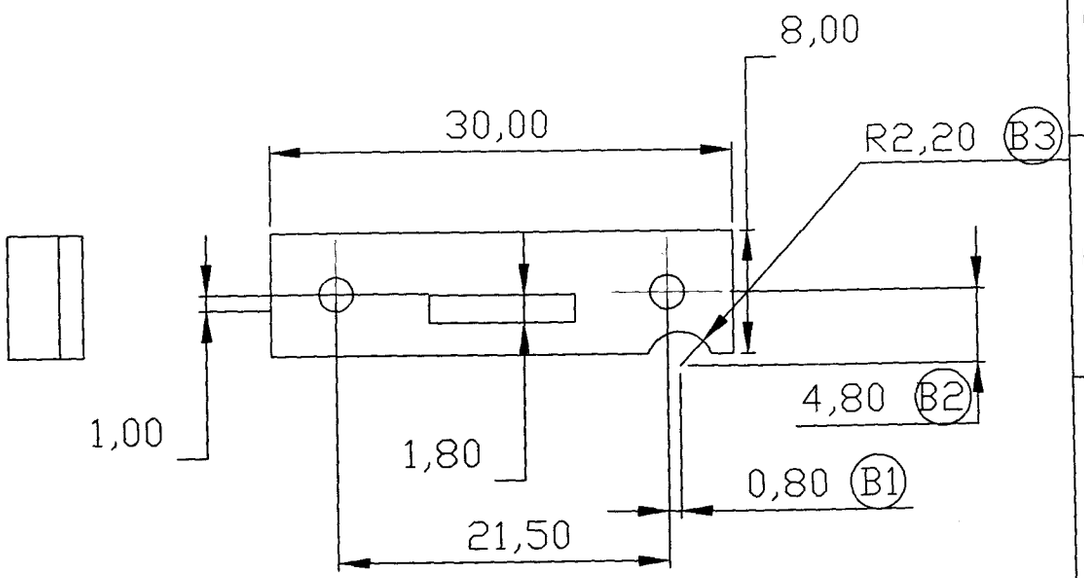

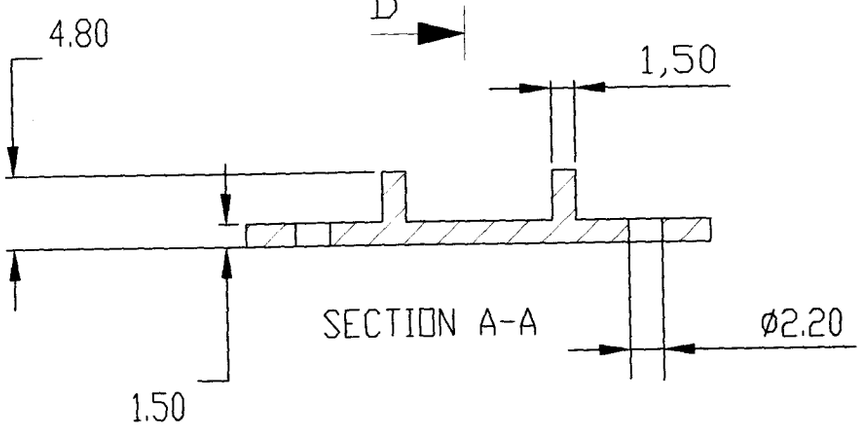

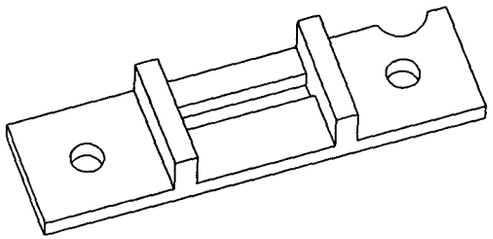

REV.	ZONE-CHANGES	ER#	DATE	CR NO.
B	B1-B3 UPDATE		Apr/18/06	
A	NEW RELEASE			

MAT'L	ABS PA766	UNLESS OTHERWISE STATED	HEALTHCARE TECHNOLOGY INTERNATIONAL LTD.
COLOR	BLACK	TEXTURE	
HARDNESS		COATING	
PROCESS/JOINING		ROUGHNESS	
STANDARDS			

WALL THICKNESS		1.5 MM
LINEAR	.X	±0.1 MM
	.XX	±0.05MM
ANGULAR		± 0.5 °
DRAFT ANGLE/SIDE		1°MAX
BURR & FLASH		0.1MAX
BREAK & CORNER		R0.2 MAX
PARTING LINE MISMATCH		0.05MAX

TITLE	SUPPORT PLATE		M#: 7514
			CAVITY
PROJECT	#688	SCALE	
DSGN		SHEET	1 OF 1
DFTS			
CHKR		PART NO.	REV.
APPD		688-70512	B

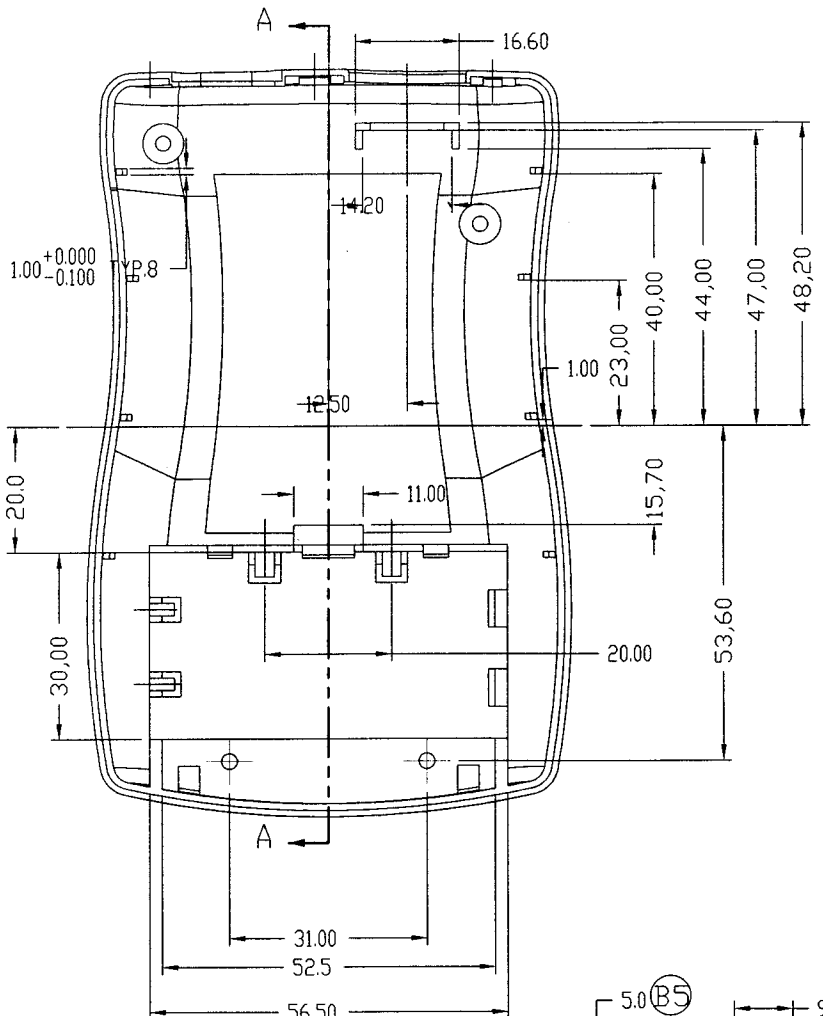

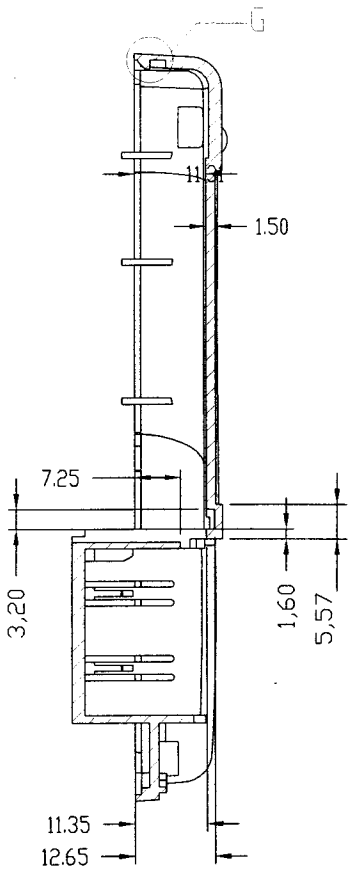

SECTION A-A

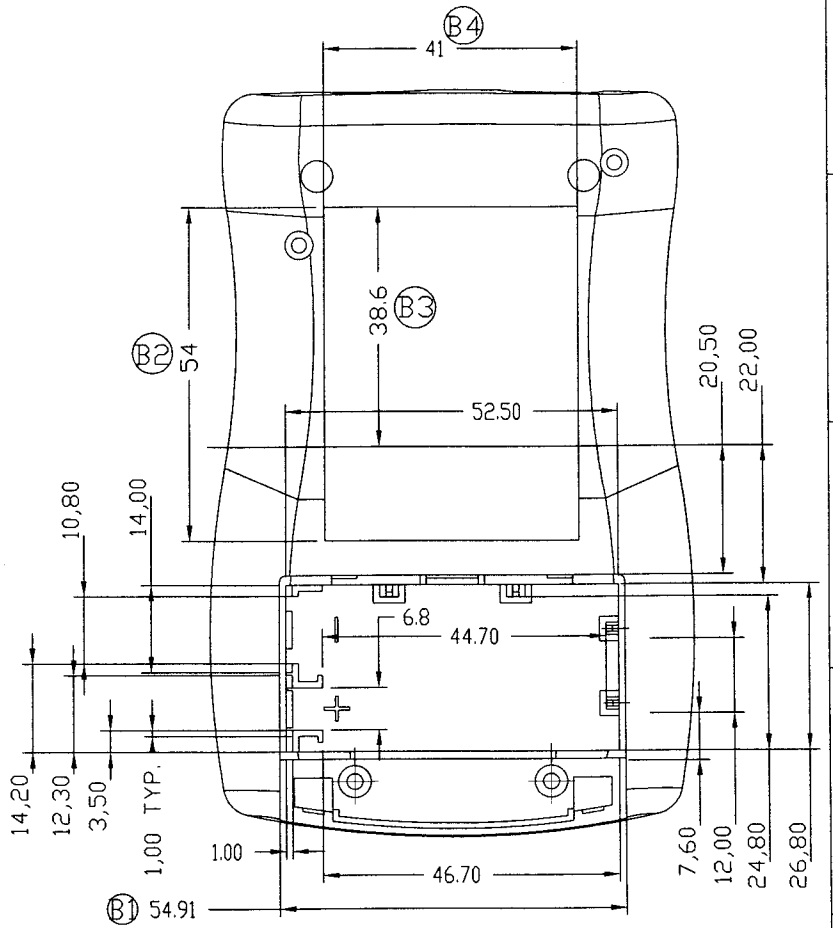

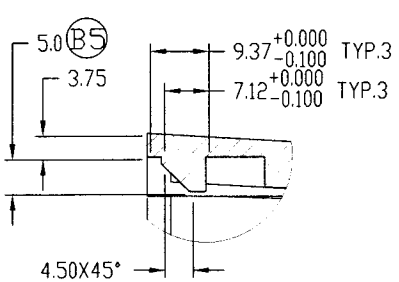

DETAIL G
SCALE 3 : 1

REV.	ZONE-CHANGES	ER#	DATE	CR NO.
B	B1-B5 UPDATE		Apr/28/06	
A	NEW RELEASE			

MAT'L: ABS PA766	UNLESS OTHERWISE STATED	HEALTHCARE TECHNOLOGY INTERNATIONAL LTD.	
COLOR: Cool Gray 3C / TEXTURE: YS11005	WALL THICKNESS: 2.0 MM	TITLE: BOTTOM HOUSING	M#: 7513 CAVITY
HARDNESS / COATING	LINEAR .X: ±0.10 MM; LINEAR .XX: ±0.05 MM		
	ANGULAR: ± 0.5°	PROJECT: #688	SCALE
PROCESS/JOINING / ROUGHNESS	DRAFT ANGLE/SIDE: 1 °MAX	DSGN	SHEET 1 OF 5
	BURR & FLASH: 0.1 MAX	DFTS	
STANDARDS	BREAK & CORNER: R 0.2 MAX	CHKR	PART NO. / REV.
	PARTING LINE MISMATCH: 0.05 MAX	APPD	688-66743 / B

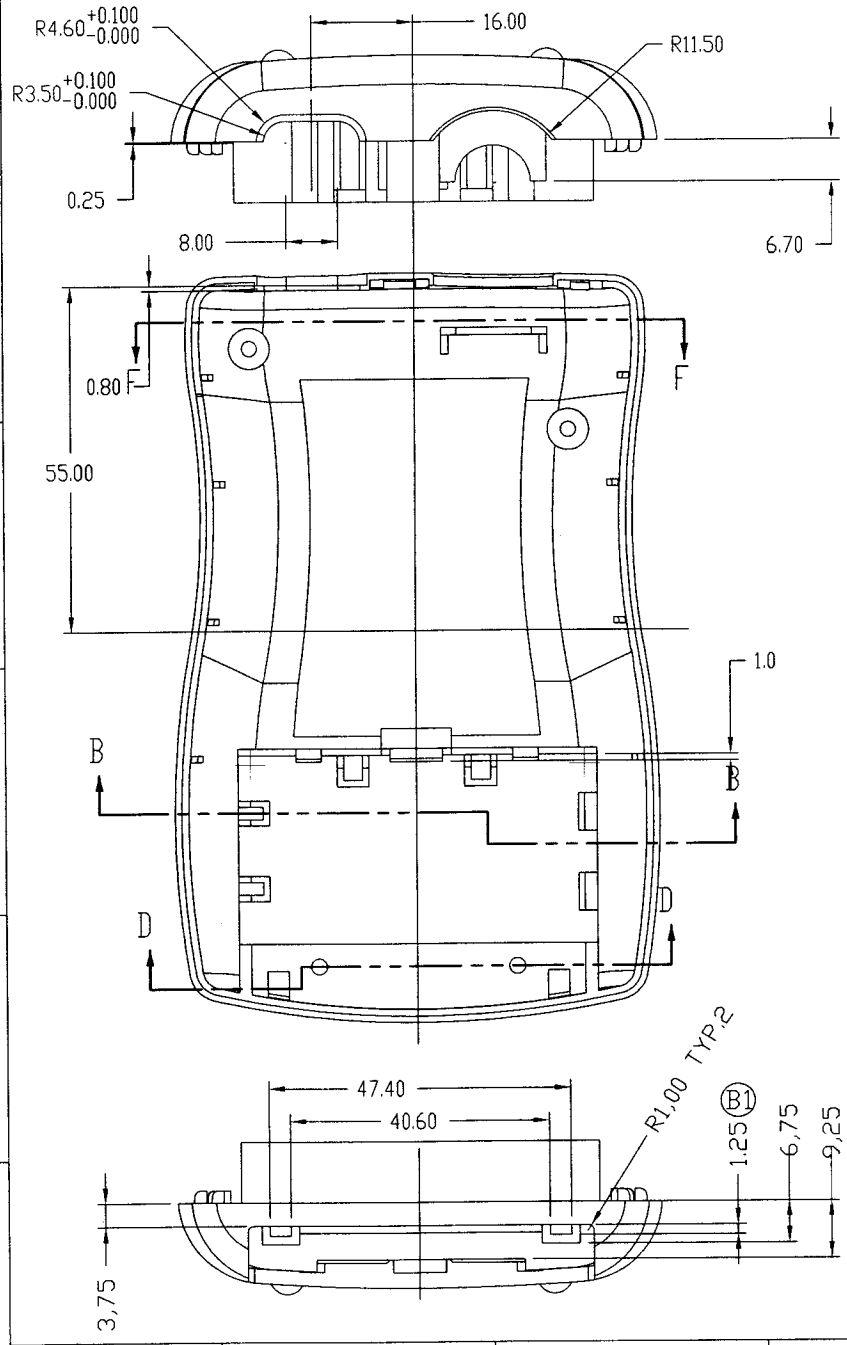

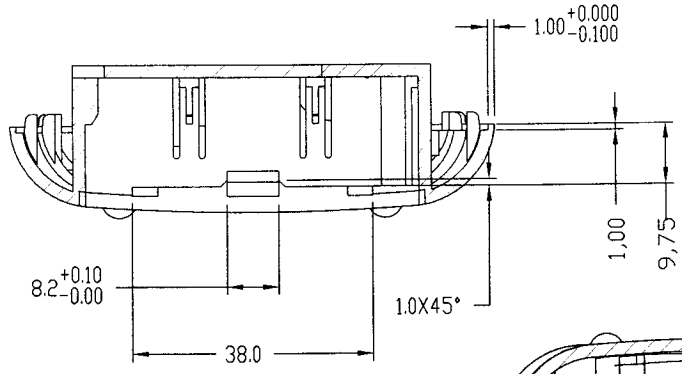

SECTION B-B

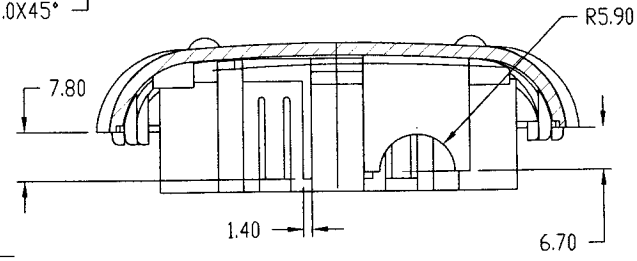

SECTION F-F

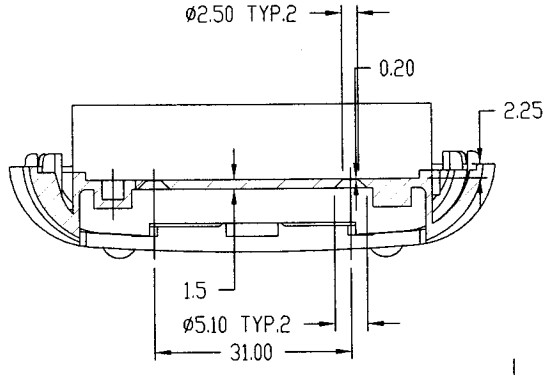

SECTION D-D

REV.	ZONE-CHANGES	ER#	DATE	CR NO.
B	B1 UPDATE		Apr/28/06	
A	NEW RELEASE			

MAT'L: ABS PA766	UNLESS OTHERWISE STATED	HEALTHCARE TECHNOLOGY INTERNATIONAL LTD.	
COLOR: Cool Gray 3C	TEXTURE: YS11005	WALL THICKNESS: 2.0 MM	TITLE: BOTTOM HOUSING
HARDNESS	COATING	LINEAR .X: ±0.10 MM	M#: 7513
		LINEAR .XX: ±0.05 MM	CAVITY
		ANGULAR: ± 0.5 °	PROJECT: #688
PROCESS/JOINING	ROUGHNESS	DRAFT ANGLE/SIDE: 1 °MAX	DSGN
		BURR & FLASH: 0.1 MAX	DFTS
STANDARDS		BREAK & CORNER: R 0.2 MAX	CHKR
		PARTING LINE MISMATCH: 0.05 MAX	APPD

SCALE | SHEET 2 OF 5 | PART NO. 688-66743 | REV. B

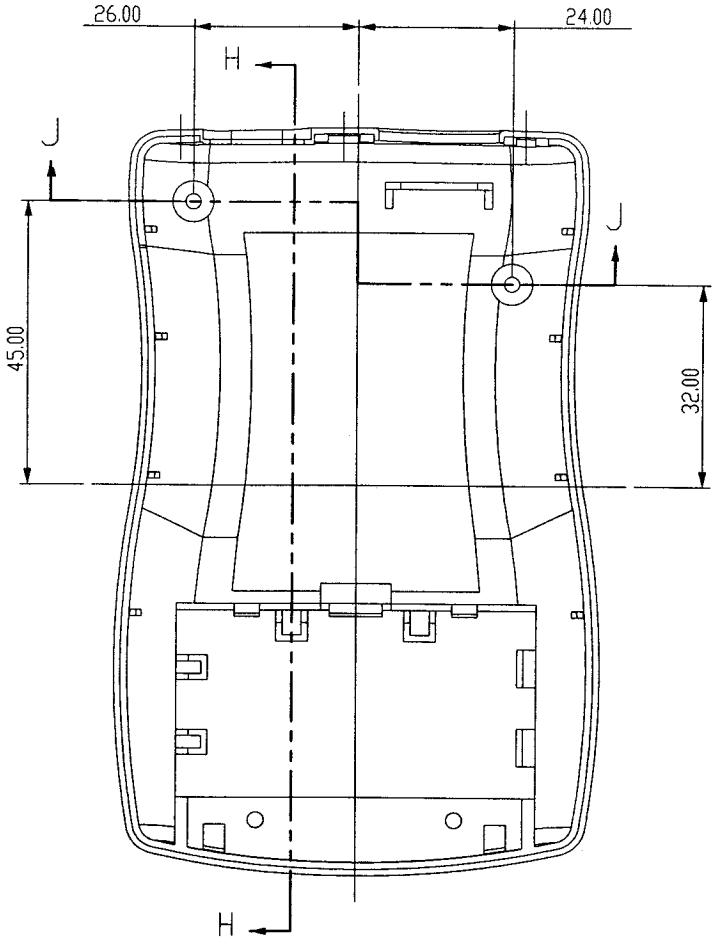

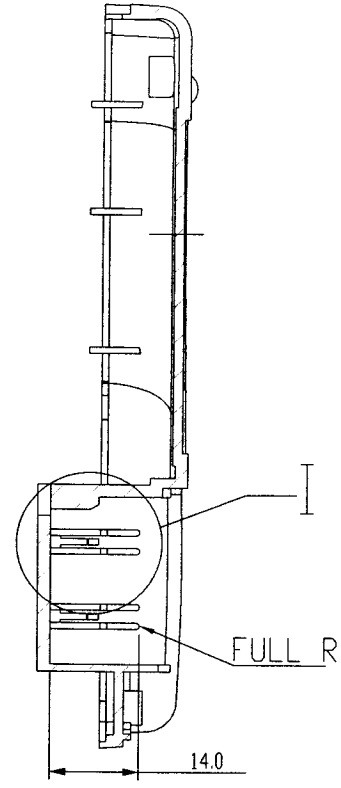

SECTION H-H

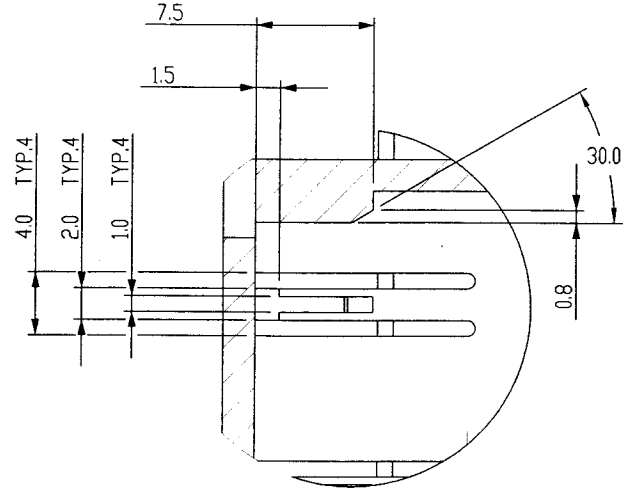

DETAIL I
SCALE 2 : 1

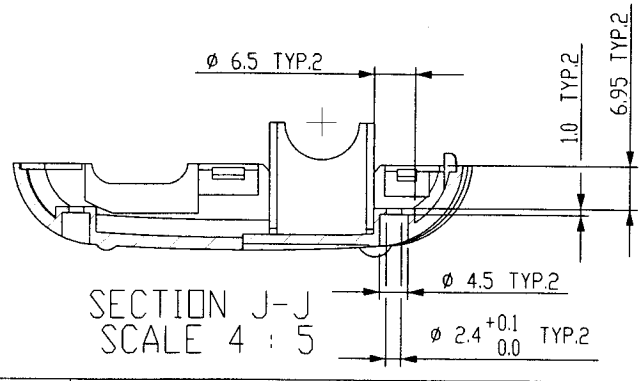

SECTION J-J
SCALE 4 : 5

REV.	ZONE-CHANGES	ER#	DATE	CR NO.
B	SHEET1,SHEET2 UPDATE		Apr/28/06	
A	NEW RELEASE			

MAT'L	ABS PA766	UNLESS OTHERWISE STATED	HEALTHCARE TECHNOLOGY INTERNATIONAL LTD.
COLOR	Cool Gray 3C	TEXTURE	YS11005
HARDNESS		COATING	
PROCESS/JOINING		ROUGHNESS	
STANDARDS			

WALL THICKNESS		2.0 MM
LINEAR	.X	±0.10 MM
	.XX	±0.05 MM
ANGULAR		± 0.5°
DRAFT ANGLE/SIDE		1° MAX
BURR & FLASH		0.1 MAX
BREAK & CORNER		R 0.2 MAX
PARTING LINE MISMATCH		0.05 MAX

TITLE	BOTTOM HOUSING		M#: 7513
			CAVITY
PROJECT	#688	SCALE	
DSGN		SHEET	3OF 5
DFTS			
CHKR		PART NO.	REV.
APPD		688-66743	B

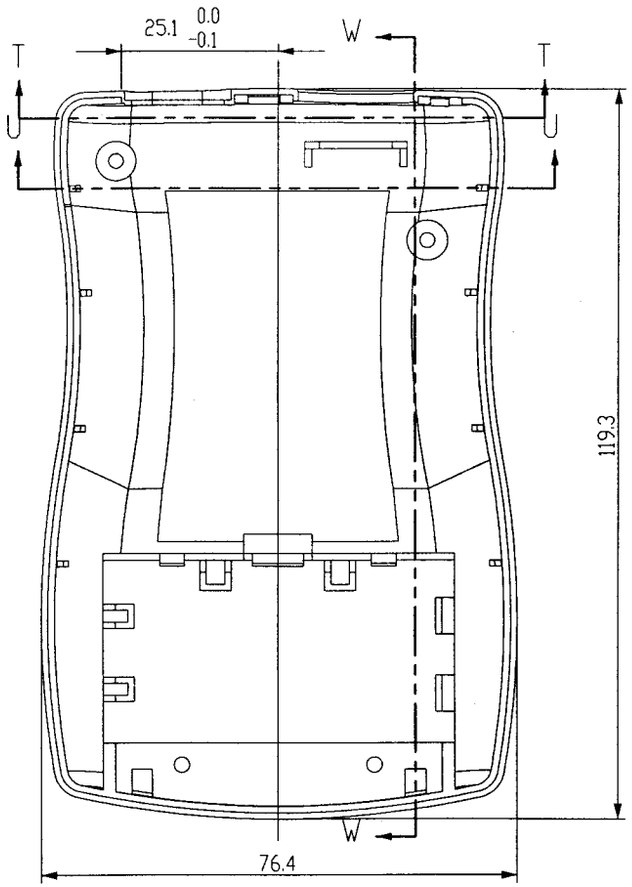

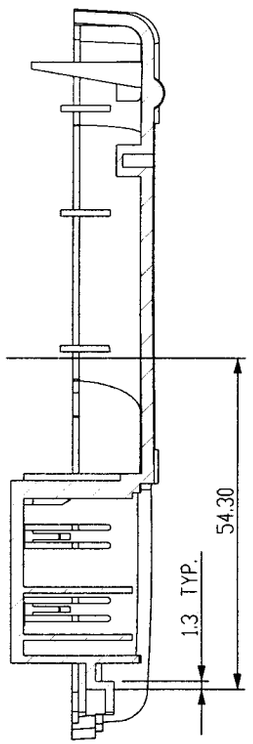

SECTION W-W
SCALE 4 : 5

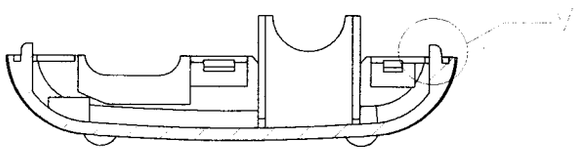

SECTION U-U
SCALE 4 : 5

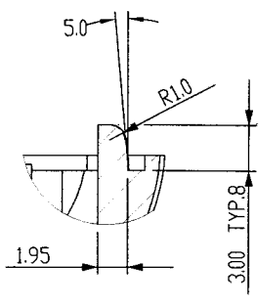

DETAIL V
SCALE 2 : 1

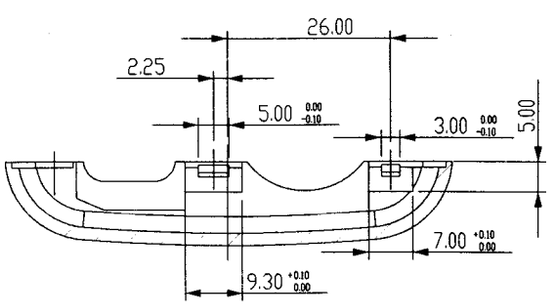

SECTION T-T
SCALE 4 : 5

REV.	ZONE-CHANGES	ER#	DATE	CR NO.
B	SHEET1,SHEET2 UPDATE		Apr/28/06	
A	NEW RELEASE			

MAT'L	ABS PA766	UNLESS OTHERWISE STATED	HEALTHCARE TECHNOLOGY INTERNATIONAL LTD.
COLOR	Cool Gray 3C	TEXTURE	YS11005
HARDNESS		COATING	
PROCESS/JOINING		ROUGHNESS	
STANDARDS			

WALL THICHNESS		2.0 MM
LINEAR	.X	±0.10 MM
	.XX	±0.05 MM
ANGULAR		± 0.5 °
DRAFT ANGLE/SIDE		1 °MAX
BURR & FLASH		0.1 MAX
BREAK & CORNER		R 0.2 MAX
PARTING LINE MISMATCH		0.05 MAX

TITLE	BOTTOM HOUSING	M#: 7513	CAVITY
PROJECT	#688	SCALE	
DSGN		SHEET	4 OF 5
DFTS			
CHKR		PART NO.	REV.
APPD		688-66743	B

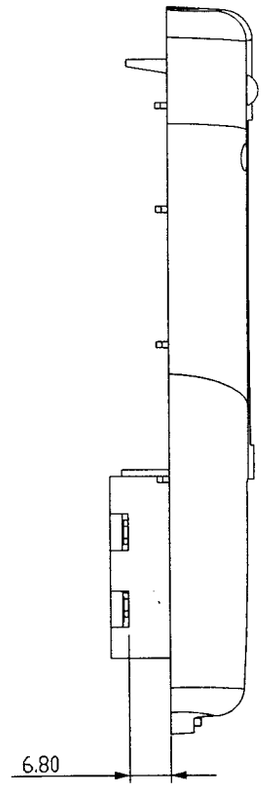

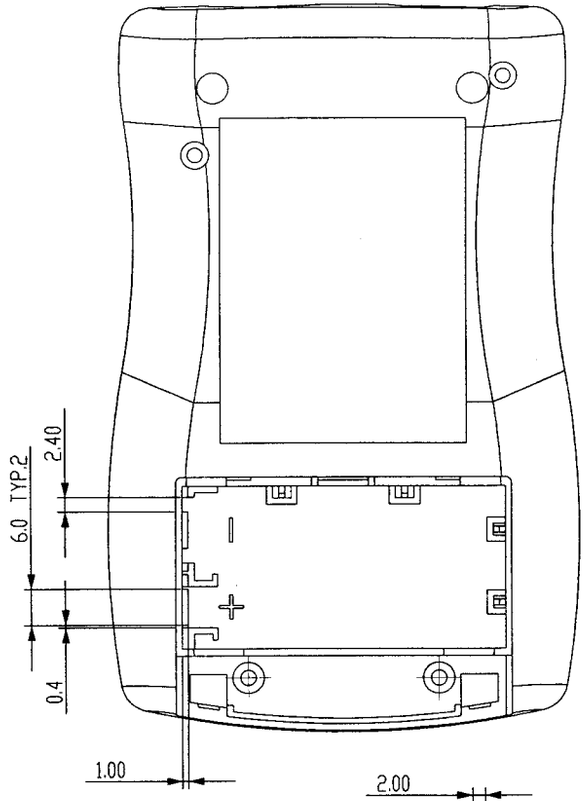

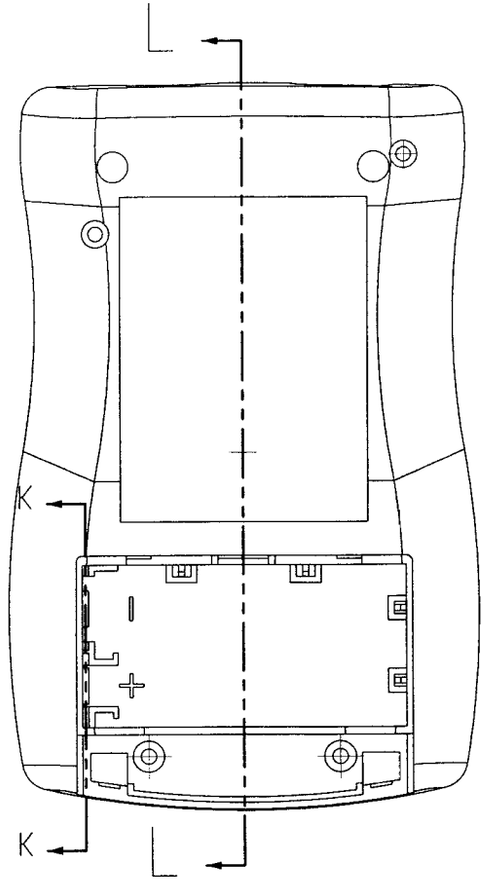

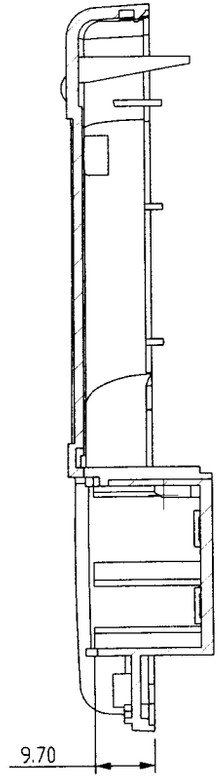

SECTION L-L

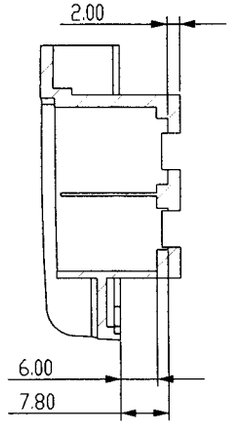

SECTION K-K

REV.	ZONE-CHANGES	ER#	DATE	CR NO.
B	SHEET1,SHEET2 UPDATE		Apr/28/06	
A	NEW RELEASE			

MAT'L	ABS PA766	UNLESS OTHERWISE STATED	HEALTHCARE TECHNOLOGY INTERNATIONAL LTD.
COLOR: Cool Gray 3C	TEXTURE: YS11005	WALL THICKNESS: 2.0 MM	TITLE: BOTTOM HOUSING
HARDNESS	COATING	LINEAR .X: ±0.1 MM; .XX: ±0.05 MM	M#: 7513; CAVITY
		ANGULAR: ± 0.5°	PROJECT: #688
PROCESS/JOINING	ROUGHNESS	DRAFT ANGLE/SIDE: 1°MAX	DSGN
		BURR & FLASH: 0.1 MAX	DFTS
STANDARDS		BREAK & CORNER: R 0.2 MAX	CHKR
		PARTING LINE MISMATCH: 0.05 MAX	APPD

SCALE | SHEET 5 OF 5 | PART NO. 688-66743 | REV. B