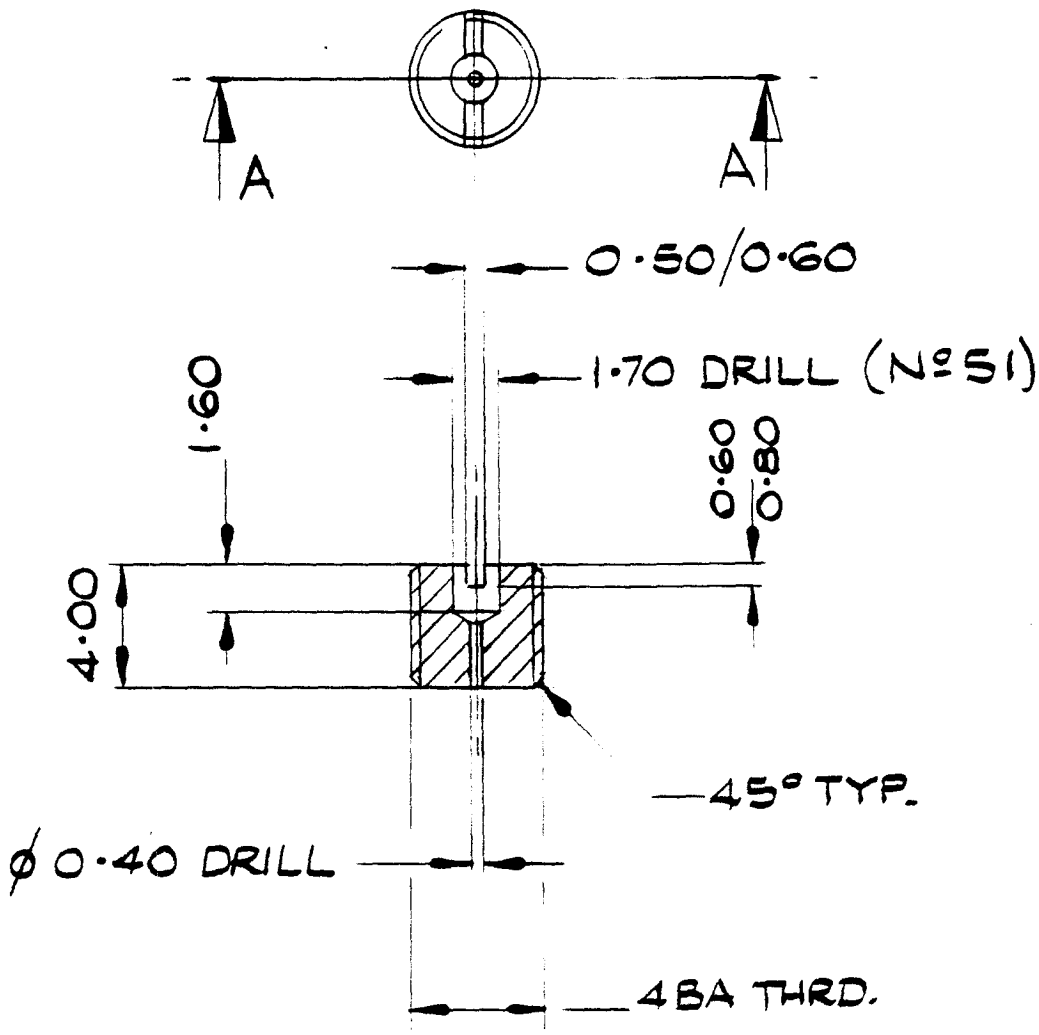

REMOVE ALL BURRS & SHARP EDGES

TITLE RESTRICTOR - GAUGE		surface finish, microns unless otherwise stated 0·8	
MATERIAL BRASS BS2874 CZ121	projection	process finish	
	date 6-94	scale 4:1	first used on No. 9901-
DIMENSIONS mm tol. unless otherwise stated: 1 or no dec. place ± 0·5; 2 dec. place ± 0·1		DRAWN E.Hayward	PART No. 9901-07 sht. 1 of 1

Park House 18 East Park tel.0 279 723076
Sawbridgeworth Herts fax.0 279 600518
MEDDS

19 SEP 1996