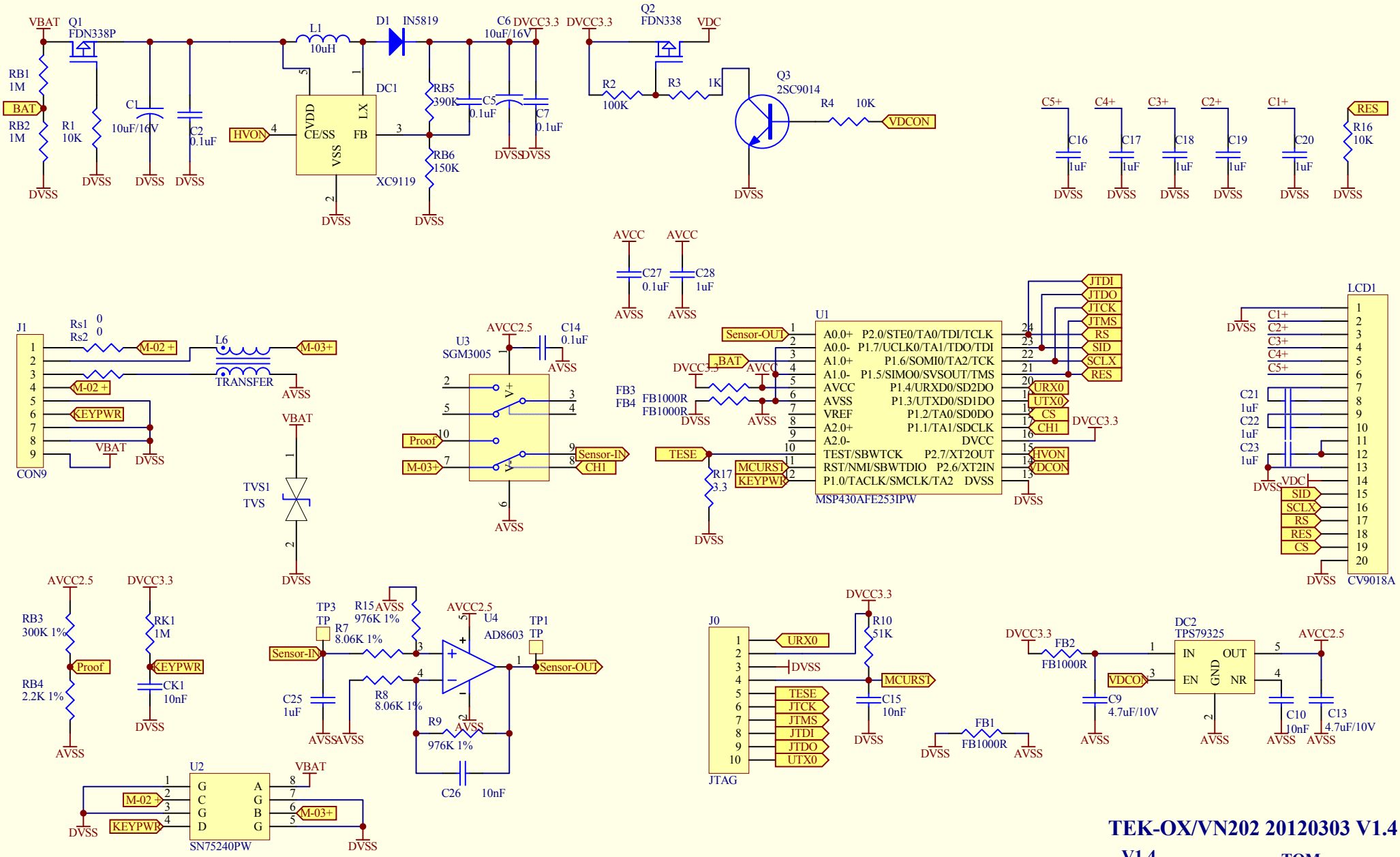

TEK-OX/VN202 20120303 V1.4

V1.4 **TOM**