capnography

VersaStream®

VM-2500 Series CO_2 Sampling Lines Selection Guide

Available CO_2 sampling lines

Nasal Sampling Line

Nasal Cannula

Nasal/Oral Cannula

Airway Adapter Sampling Line

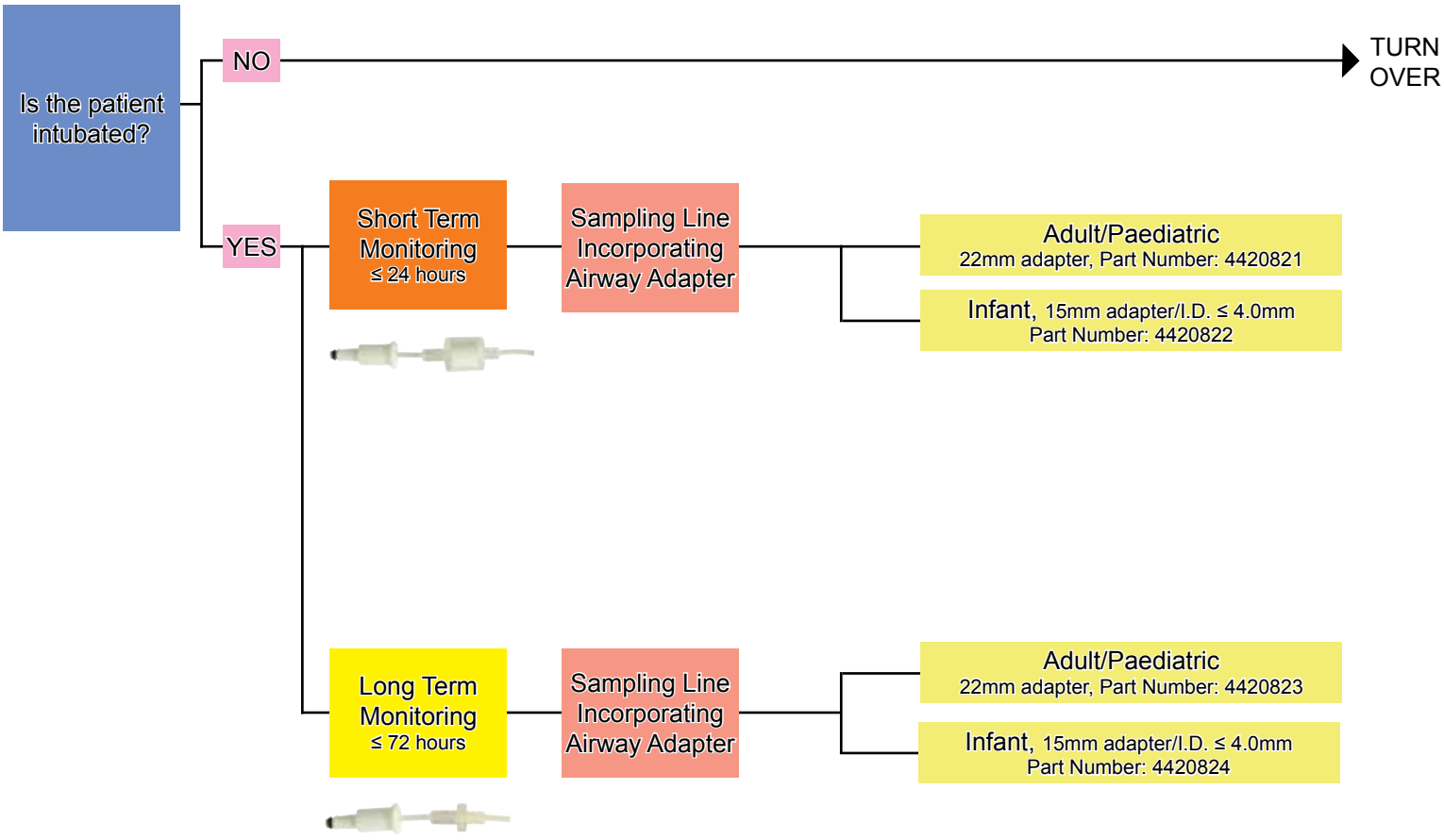

VIAMED

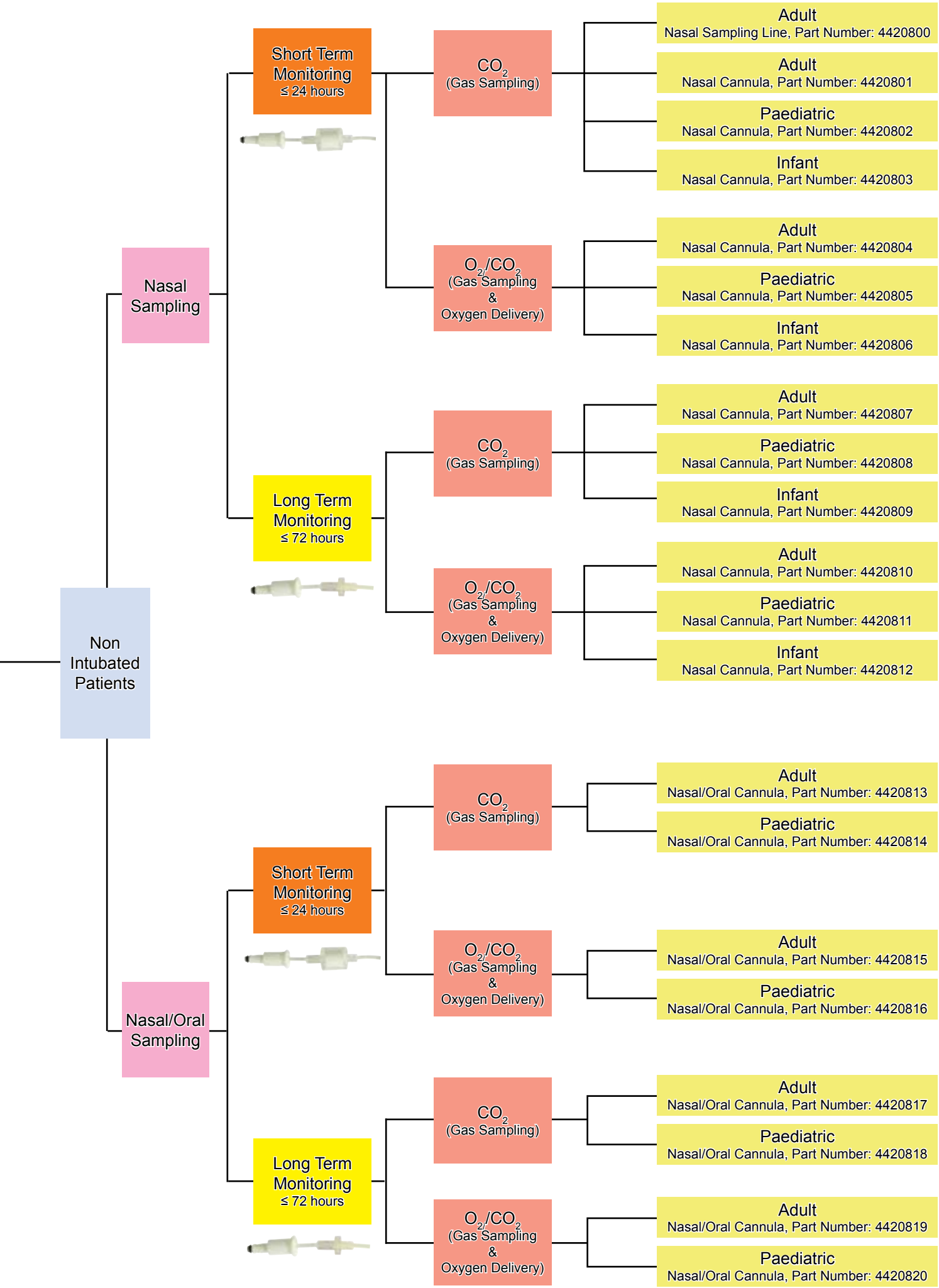

VIAMED

Part Number: 4490110
Date: 01/15