D SERIES CIRCULAR PLASTIC CONNECTORS

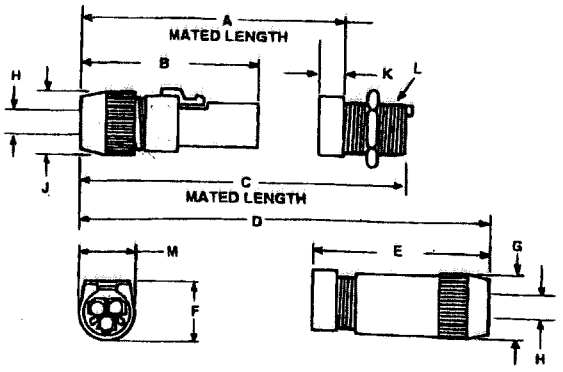

Contact Arrangement

[D01 Housing] [D02 Housing]

Design allows each connector half to accept pins or sockets. Feature low insertion/extraction force for high life cycles, 10,000+ operations. Quick disconnect push-button release. High impact, black polycarbonate housing available in D01 or D02 style. Solder cup and crimp contacts for 2-3 amps, 22-26 AWG, feature brass body, beryllium copper wires, and gold over nickel plating. Removable contacts 3-9 positions. Panel or cable mount receptacles available. Temperature rating: –40° to +85°C. UL recognized. *Order tooling separately on this page.*

Dimension	D01 Housing	D02 Housing
A	1.142" (29)	1.358" (34.5)
B	1.614" (41)	1.950" (49.5)
C	1.732" (44)	2.087" (53)
D	2.400" (61)	2.953" (75)
E	1.500" (38)	1.772" (45)
F	0.512" (13)	0.689" (17.5)
G (Diameter)	0.512" (13)	0.709" (18)
H (Diameter)	0.118" (3) minimum	0.236" (6) minimum
J (Diameter)	0.472" (12)	0.709" (18)
K	0.158" (4)	0.278" (7)
L	M11 x 100 thread	M15 x 100 thread
M	0.512" (13)	0.669" (17)

D01 SOLDER STYLE CONNECTORS

Stock No.	Type	Description	Contacts	1-24	25-49
96F3239	D01PB306MST	Plug	3	5.59	5.13
96F3240	D01EEB306FST	Receptacle +	3	6.01	5.52
96F3241	D01EPB306FST	Receptacle *	3	9.35	8.60
96F3242	D01PB406MST	Plug	4	6.96	6.40
96F3243	D01EEB406FST	Receptacle +	4	6.98	6.42
96F3244	D01EPB406FST	Receptacle *	4	10.08	9.27
D01 CRIMP STYLE CONNECTORS					
16F4440	D01EEB306FRT	Receptacle+	3	7.15	6.35
16F4441	D01PB306MRT	Plug	3	6.65	5.91
16F4442	D01EPB306FRT	Receptacle*	3	11.13	9.89
D02 SOLDER STYLE CONNECTORS					
96F3245	D02PB706MST	Plug	7	12.06	11.08
96F3246	D02EEB706FST	Receptacle +	7	12.52	11.51
96F3247	D02EPB706FST	Receptacle *	7	16.27	14.95
96F3248	D02PB906MST	Plug	9	12.90	11.85
96F3249	D02EEB906FST	Receptacle +	9	14.07	12.93
96F3250	D02EPB906FST	Receptacle *	9	17.82	16.37
96F3251	D02PB125MST	Plug	12	15.60	14.34
96F3252	D02EEB125FST	Receptacle +	12	19.23	17.68
96F3253	D02EPB125FST	Receptacle *	12	23.00	21.14

+ Panel Mount Receptacle * Cable Mount Receptacle

(8783) (de52027)

D SERIES TOOLING

Stock No.	Type	Description	Use With	1-4
16F4443	AFM8	Crimp Tool	D01 & D02 (7 & 9 Contacts)	412.08
16F4445	K623	Crimp Tool Positioner	D02 (7 & 9 Contacts)	85.81
96F3254	S/DEM1-0060	Removal Tool	D01 & D02 (7 & 9 Contacts)	70.35
16F4447	T1271	Insertion Tool	D02 (12 Contacts)	170.11

(8856) (he08657)

L SERIES RACK AND PA

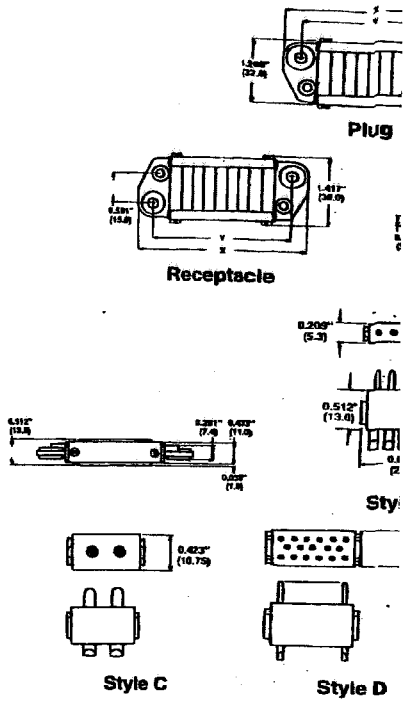

Module Style	A	B	
Width	1 Unit	1.5 Units	
No. of Contacts	5	3	
Contact Dia.	0.059" (1.5)	0.098" (2.5)	0.1
Current Rating	8 amps	15 amps	2
AWG	16	12	

HOUSING DIMEN

UNITS	4	1
Dim. X	2.559" (65)	4.291
Dim. Y	1.969" (50)	3.701

Modules, mounting clips, side rails and end caps that are blind matable with up to 0.049" misalig Signals at 8, 15, 25 and 50 amperes power. Beryl body. Pins 10μ" gold over nickel plated. Tempera components by first determining modules, then frame, and plug or receptacle end caps.

L SERIES RACK AND PANEL M

Stock No.	Type	Module
96F3256	LAFST	A
96F3258	LBFST	B
96F3260	LCFST	C
96F3262	LDFST	D
96F3264	LMFST	M
L SERIES RACK AND PANEL M		
96F3257	LAMST	A
96F3259	LBMST	B
96F3261	LCMST	C
96F3263	LDMST	D
96F3265	LMMST	M

L SERIES HARDW

Stock No.	Type	Descriptio
01F329	YSR000 6Z	Side Rail for U
01F330	YSR000 8Z	Side Rail for U
01F331	YSR0010Z	Side Rail for U
96F3267	YSR0012Z	Side Rail for U
16F6948	YSR0016Z	Side Rail for U
01F332	YSR0020Z	Side Rail for U
96F3269	YHD0027	Clips
96F3270	YSW030-003C	Screws
96F3271	YEC0030C	End Cap with (Pins for Plug
96F3272	YEC0031C	End Cap with (Pin Sockets fo Receptacle

(8752)